PACKAGE HEAT PUMP

TEMPSTAR®
Heating and Cooling Products

PH55
10 SEER

2 THRU 5 TON SINGLE PACKAGE

FEATURES

CONSTRUCTED FOR DURABILITY

- All Panels Made From Galvanized Steel Pre-coated Inside and Out - Using a Polyester Top Coat, Over a Urethane Primer and Oxide Pre-treatment
- All Coils Made From Copper Tube and Aluminum Fins
- Painted Base With Embossed Support Rails
- Embossed Water Dam In Base - Prevents Water Migration To Indoor Section From Condenser Area
- Protective Coil Guard - Standard

HIGH STATIC CAPABILITY

- Designed for mobile home and permanent residence applications

EASY MAINTENANCE

- Slide Out Blower Assembly For Easy Maintenance
- External Gauge Ports
- All Electrical Controls Behind One Access Panel
- One Panel Allows Access To Clean Evaporator and Service All Refrigeration Components

QUALITY PERFORMANCE & RELIABILITY

- Pre-painted Condenser Coil - Provides Greater Corrosion Resistance
- Heat Pumps Use 24v Electronic Integrated Defrost Control New "Soft Changeover" Feature / Solid State Design Provides Greater Reliability
- Plastic Drain Pan - Minimizes Residual Condensate for Improved Humidity Control and Air Quality

DESIGNED FOR EASY INSTALLATION

- Round Duct Flanges With Retainer Bead For Easy Flex Duct Connection
- Low 27" Height (Max. 17" Duct Height) Allows Installation In Tight Spaces
- Multi-speed Blower Motor - Adjustable To Varying Application Requirements

DEPENDABLE WARRANTY

- 5 Years On All Parts / 5 Year Compressor

ACCESSORIES

- Slip In Electric Heaters Available With Or Without Breakers
- Flexible Duct & Duct Adder Kits To Adapt To Most Applications
- Unit Disconnect Switch - May Eliminate Need For Field Mounted Disconnect (*Consult Local Codes)

UL ® c UL ®

MANUFACTURER CERTIFIED TO ARI AS COMPLYING WITH • UNITARY AIR-CONDITIONING EQUIPMENT • CERTIFICATION SECTIONS OF ARI STANDARD 210

LIMITED PARTS 5 YEAR WARRANTY

RESIDENTIAL AND COMMERCIAL SYSTEMS • SPLIT SYSTEMS • PACKAGED AIR CONDITIONERS • COMBINATION GAS / ELECTRIC UNITS • HEAT PUMPS • AIR HANDLERS • MANUFACTURED HOME AIR CONDITIONERS • GAS, OIL AND ELECTRIC FURNACES

International Comfort Products
650 Heil-Quaker Avenue, Lewisburg, TN 37091

427 21 1003 01 8/99

UNIT SPECIFICATIONS

MODEL NUMBER	Electrical Data				Condenser Data								
					Coil			Fan Motor			Fan		
	208 / 230 Voltage Phase - Hz	Time Delay Fuse Size	HACR Brkr / Max. Fuse	Ampacity	Total Face Area (Sq. Ft.)	Fins Per In. / Rows	Tube Dia. (In.)	HP	Full Load Amps	Locked Rotor Amps	Size Dia. (In.)	RPM (Max.)	CFM (Max.)
PH5524AKA	1-60	20 amps.	25 amps.	17.0	8.75	18 / 1	3/8	1/6	1.0	1.72	20.375	1100	2600
PH5530AKA	1-60	25 amps.	30 amps.	21.1	8.75	18 / 1-1/2	3/8	1/6	1.0	1.72	20.375	1100	2600
PH5536AKA	1-60	30 amps.	40 amps.	25.6	8.75	18 / 1-1/2	3/8	1/3	1.4	4.04	20.375	1120	3000
PH5542AKA	1-60	40 amps.	50 amps.	31.7	11.04	18 / 1-1/2	3/8	1/3	1.4	4.04	20.375	1120	3000
PH5548AKA	1-60	45 amps.	50 amps.	35.1	11.04	18 / 2	3/8	1/3	1.5	4.04	20.375	1120	3000
PH5560AKA	1-60	60 amps.	60 amps.	42.9	11.04	18 / 2	3/8	1/3	1.7	5.00	20.375	1140	3000

MODEL NUMBER	Evaporator Coil									Compressor		Factory Refrigerant Charge R-22 (Oz.)	Ship Weight (Lbs/Kg)
	Coil				Motor		Blower						
	Total Face Area (Sq. Ft.)	Fins Per In. / Rows	Tube Dia. (In.)	Blower H.P. / Type / Speeds	Full Load Amps	Locked Rotor Amps	Type & Size	RPM (Maximum)	CFM Rated	Rated Load Amps	Locked Rotor Amps		
PH5524AKA	4	14 / 2	3/8	1/4 / PSC / 3	2.1	3.10	DD10-6A	1075	800	11.30	61.0	63	335/152
PH5530AKA	4	14 / 3	3/8	1/3 / PSC / 3	2.9	5.6	DD10-6A	1075	1000	13.72	75.0	95	344/156
PH5536AKA	4	14 / 3	3/8	1/2 / PSC / 4	4.9	7.4	DD10-8A	1075	1200	15.20	96.0	112	356/161
PH5542AKA	4	14 / 3	3/8	1/2 / PSC / 4	4.9	7.4	DD10-8A	1075	1400	20.10	127.0	114	368/167
PH5548AKA	4	14 / 4	3/8	1 / PSC / 3	6.3	13.2	DD10-8A	1075	1600	21.80	131.0	120	432/196
PH5560AKA	4	14 / 4	3/8	1 / PSC / 2	4.5	13.0	DD11-8	1075	1900	29.40	175.0	121	442/198

PERFORMANCE DATA: COOLING & HEATING

MODEL NUMBER	Cooling Data			Heating Data						Power Input Watts	Evaporated Rated Airflow (SCFM)	Ext. Static Pressure Drop [3] Wet
	Rated Capacity BTUH	S.E.E.R.	E.E.R. [2]	Rated Capacity [1] BTUH @ 47° F	Rated Capacity [1] BTUH @ 17° F	HSPF	S / T Ratio	COP @ 47° F	COP @ 17° F			
PH5524AKA	22,800	10.00	8.45	24,600	12,000	6.8	.75	3.12	1.92	2698	800	.50
PH5530AKA	28,600	10.00	8.80	28,000	13,900	6.8	.76	3.20	1.90	3250	1000	.50
PH5536AKA	34,000	10.00	9.00	33,000	18,700	7.05	.78	3.08	2.10	3777	1200	.50
PH5542AKA	40,000	10.00	8.95	45,500	24,800	6.9	.79	3.20	1.90	4469	1400	.50
PH5548AKA	45,000	10.05	9.10	45,500	27,000	7.0	.79	3.10	2.10	4945	1600	.50
PH5560AKA	55,000	10.00	8.25	60,000	34,000	7.0	.78	3.50	2.20	6659	1900	.50

[1] Rated Capacity @ 230 Volts. For applications at 208 volts deduct 1000 BTU. [2] For reference only [3] Includes a .08 drop for a filter

BLOWER PERFORMANCE DATA

MODEL NUMBER		PH5524AKA			PH5530AKA			PH5536/42AKA				PH5548AKA			PH5560AKA	
Blower Speed		Med Lo	Med Hi	Hi	Med Lo	Med Hi	Hi	Lo	Med Lo	Med Hi	Hi	Med Lo	Med Hi	Hi	Med Hi	Hi
AIR DELIVERY IN	.25	767	901	1070	976	1069	1130	1208	1373	1471	1589	1707	1827	1904	1919	2214
CFM	.35	759	887	1053	946	1023	1086	1190	1337	1427	1540	1651	1759	1822	1878	2139
VARYING EXT.	.45	747	875	1028	946	982	1033	1176	1292	1379	1467	1577	1670	1736	1837	2050
STATIC	.55	718	856	994	910	927	973	1137	1260	1329	1411	1497	1572	1635	1789	1948
PRESSURE (IN. W.C.)	.65	672	826	944	863	863	901	1085	1186	1256	1323	1417	1478	1530	1737	1866
	.75	671	737	884	805	781	817	1019	1109	1181	1235	1322	1377	1411	1692	1808

Air delivery against shown external static pressures taken with 230V. to unit, dry coil and equipped with approved heater. For wet coil add .05" W.C to Ext. Static Press. measurement.
NOTE: For 208 Volt applications, reduce airflow by 15%.

EXPANDED PERFORMANCE DATA (COOLING) - PH5524AKA

IDB*	Airflow CFM		Outdoor Ambient Temperature - Degrees F. Dry Bulb																							
			65				75				85				95				105				115			
			Entering Indoor Temperature - Degrees F. Wet Bulb																							
			59	63	67	71	59	63	67	71	59	63	67	71	59	63	67	71	59	63	67	71	59	63	67	71
70	896	MBh	22.3	23.2	25.4	-	21.8	22.6	24.8	-	21.3	22.1	24.2	-	20.8	21.5	23.6	-	19.7	20.5	22.4	-	18.3	19.0	20.8	-
		S/T	0.75	0.63	0.44	-	0.78	0.65	0.45	-	0.80	0.67	0.46	-	0.83	0.69	0.48	-	0.86	0.72	0.50	-	0.86	0.72	0.50	-
		KW	2.07	2.12	2.19	-	2.24	2.29	2.37	-	2.39	2.45	2.53	-	2.53	2.58	2.67	-	2.64	2.70	2.79	-	2.74	2.80	2.90	-
	800	MBh	21.7	22.5	24.6	-	21.2	22.0	24.1	-	20.7	21.4	23.5	-	20.2	20.9	22.9	-	19.2	19.9	21.8	-	17.8	18.4	20.2	-
		S/T	0.72	0.60	0.42	-	0.74	0.62	0.43	-	0.76	0.64	0.44	-	0.79	0.66	0.46	-	0.82	0.68	0.47	-	0.82	0.69	0.48	-
		KW	2.06	2.10	2.17	-	2.22	2.27	2.35	-	2.37	2.43	2.51	-	2.50	2.56	2.65	-	2.62	2.68	2.77	-	2.71	2.78	2.87	-
	704	MBh	20.6	21.4	23.4	-	20.1	20.9	22.9	-	19.6	20.4	22.3	-	19.2	19.9	21.8	-	18.2	18.9	20.7	-	16.9	17.5	19.2	-
		S/T	0.69	0.57	0.40	-	0.71	0.60	0.41	-	0.73	0.61	0.42	-	0.75	0.63	0.44	-	0.78	0.65	0.45	-	0.79	0.66	0.46	-
		KW	2.02	2.07	2.14	-	2.19	2.24	2.31	-	2.33	2.39	2.47	-	2.46	2.52	2.60	-	2.57	2.63	2.72	-	2.66	2.73	2.82	-
75	896	MBh	22.7	23.4	25.3	27.2	22.2	22.8	24.7	26.5	21.7	22.3	24.1	25.9	21.1	21.8	23.6	25.3	20.1	20.7	22.4	24.0	18.6	19.1	20.7	22.2
		S/T	0.86	0.77	0.58	0.37	0.89	0.79	0.60	0.39	0.91	0.81	0.62	0.40	0.94	0.84	0.64	0.41	0.97	0.87	0.66	0.42	0.98	0.88	0.67	0.43
		KW	2.09	2.14	2.21	2.29	2.26	2.31	2.39	2.48	2.41	2.47	2.56	2.64	2.55	2.61	2.70	2.79	2.66	2.72	2.82	2.92	2.76	2.83	2.92	3.03
	800	MBh	22.1	22.7	24.6	26.4	21.5	22.2	24.0	25.8	21.0	21.7	23.4	25.2	20.5	21.1	22.9	24.5	19.5	20.1	21.7	23.3	18.1	18.6	20.1	21.6
		S/T	0.82	0.73	0.55	0.36	0.85	0.76	0.57	0.37	0.87	0.78	0.59	0.38	0.90	0.80	0.61	0.39	0.93	0.83	0.63	0.40	0.94	0.84	0.63	0.41
		KW	2.07	2.12	2.19	2.27	2.24	2.29	2.37	2.46	2.39	2.45	2.53	2.62	2.53	2.58	2.67	2.77	2.64	2.70	2.79	2.89	2.74	2.80	2.90	3.00
	704	MBh	21.0	21.6	23.4	25.1	20.5	21.1	22.8	24.5	20.0	20.6	22.3	23.9	19.5	20.1	21.7	23.3	18.5	19.1	20.6	22.2	17.2	17.7	19.1	20.5
		S/T	0.78	0.70	0.53	0.34	0.81	0.73	0.55	0.35	0.83	0.74	0.56	0.36	0.86	0.77	0.58	0.37	0.89	0.80	0.60	0.39	0.90	0.80	0.61	0.39
		KW	2.04	2.08	2.15	2.23	2.20	2.26	2.33	2.41	2.35	2.41	2.49	2.58	2.48	2.54	2.63	2.72	2.59	2.65	2.75	2.84	2.69	2.75	2.85	2.95
80	896	MBh	23.1	23.6	25.2	27.0	22.6	23.1	24.7	26.4	22.0	22.5	24.1	25.7	21.5	22.0	23.5	25.1	20.4	20.9	22.3	23.8	18.9	19.3	20.7	22.1
		S/T	0.94	0.88	0.72	0.54	1.00	0.91	0.74	0.56	1.00	0.94	0.76	0.57	1.00	0.97	0.79	0.59	1.00	1.00	0.82	0.61	1.00	1.00	0.82	0.62
		KW	2.11	2.16	2.23	2.31	2.28	2.33	2.41	2.50	2.44	2.49	2.58	2.67	2.57	2.63	2.72	2.82	2.69	2.75	2.84	2.95	2.78	2.85	2.95	3.06
	800	MBh	22.5	22.9	24.5	26.2	21.9	22.4	23.9	25.6	21.4	21.9	23.4	25.0	20.9	21.3	22.8	24.4	19.8	20.3	21.7	23.2	18.4	18.8	20.1	21.4
		S/T	0.90	0.84	0.68	0.51	0.93	0.87	0.71	0.53	0.95	0.89	0.73	0.54	0.98	0.92	0.75	0.56	1.00	0.96	0.78	0.58	1.00	0.96	0.78	0.59
		KW	2.09	2.14	2.21	2.29	2.26	2.31	2.39	2.48	2.41	2.47	2.56	2.64	2.55	2.61	2.70	2.79	2.66	2.72	2.82	2.92	2.76	2.83	2.92	3.03
	704	MBh	21.3	21.8	23.3	24.9	20.8	21.3	22.7	24.3	20.3	20.8	22.2	23.7	19.8	20.3	21.7	23.2	18.8	19.3	20.6	22.0	17.5	17.8	19.1	20.4
		S/T	0.86	0.80	0.65	0.49	0.89	0.83	0.68	0.51	0.91	0.86	0.70	0.52	0.94	0.88	0.72	0.54	0.98	0.92	0.75	0.56	0.99	0.92	0.75	0.56
		KW	2.06	2.10	2.17	2.25	2.22	2.27	2.35	2.43	2.37	2.43	2.51	2.60	2.50	2.56	2.65	2.74	2.62	2.68	2.77	2.87	2.71	2.78	2.87	2.97
85	896	MBh	23.5	24.0	25.1	26.8	23.0	23.4	24.5	26.2	22.4	22.9	24.0	25.6	21.9	22.3	23.4	24.9	20.8	21.2	22.2	23.7	19.3	19.6	20.6	21.9
		S/T	0.98	0.95	0.86	0.70	1.00	0.98	0.89	0.72	1.00	1.00	0.91	0.74	1.00	1.00	0.94	0.76	1.00	1.00	0.98	0.79	1.00	1.00	0.98	0.80
		KW	2.13	2.18	2.25	2.33	2.30	2.35	2.44	2.52	2.46	2.51	2.60	2.69	2.59	2.65	2.75	2.84	2.71	2.77	2.87	2.97	2.81	2.88	2.98	3.08
	800	MBh	22.8	23.3	24.4	26.0	22.3	22.7	23.8	25.4	21.8	22.2	23.3	24.8	21.2	21.7	22.7	24.2	20.2	20.6	21.6	23.0	18.7	19.1	20.0	21.3
		S/T	0.94	0.91	0.82	0.66	0.97	0.94	0.85	0.69	1.00	0.96	0.87	0.71	1.00	0.99	0.90	0.73	1.00	1.00	0.93	0.76	1.00	1.00	0.94	0.76
		KW	2.11	2.16	2.23	2.31	2.28	2.33	2.41	2.50	2.44	2.49	2.58	2.67	2.57	2.63	2.72	2.82	2.69	2.75	2.84	2.95	2.78	2.85	2.95	3.06
	704	MBh	21.7	22.1	23.2	24.7	21.2	21.6	22.6	24.1	20.7	21.1	22.1	23.6	20.2	20.6	21.6	23.0	19.2	19.5	20.5	21.8	17.8	18.1	19.0	20.2
		S/T	0.90	0.87	0.78	0.64	0.93	0.90	0.81	0.66	0.96	0.92	0.83	0.68	0.99	0.95	0.86	0.70	1.00	0.99	0.89	0.72	1.00	1.00	0.90	0.73
		KW	2.07	2.12	2.19	2.27	2.24	2.29	2.37	2.45	2.39	2.45	2.53	2.62	2.53	2.58	2.67	2.77	2.64	2.70	2.79	2.89	2.74	2.80	2.90	3.00

* Entering Indoor Temperature - Degrees F. Dry Bulb

Standard Rating

EXPANDED PERFORMANCE DATA (HEATING) - PH5524AKA

	Outdoor Ambient Temperature - Degrees F. Dry Bulb																	
	65	60	55	50	47	45	40	35	30	25	20	17	15	10	5	0	-5	-10
MBh	31.3	29.6	27.6	25.8	24.6	23.8	21.9	20.1	16.5	14.8	13.1	12.0	11.6	10.4	9.2	8.0	6.8	5.6
T/R	36.3	34.2	31.9	29.8	28.5	27.6	25.4	23.3	19.2	17.1	15.1	13.9	13.4	12.0	10.6	9.3	7.9	6.5
KW	2.50	2.44	2.39	2.34	2.31	2.29	2.24	2.19	1.95	1.90	1.86	1.83	1.81	1.77	1.72	1.68	1.63	1.58
COP	3.68	3.54	3.37	3.22	3.12	3.05	2.87	2.69	2.48	2.28	2.06	1.92	1.87	1.72	1.56	1.40	1.23	1.04
EER	12.6	12.1	11.5	11.0	10.6	10.4	9.8	9.2	8.5	7.8	7.0	6.6	6.4	5.9	5.3	4.8	4.2	3.5

EXPANDED PERFORMANCE DATA (COOLING) - PH5530AKA

IDB*	Airflow CFM		Outdoor Ambient Temperature - Degrees F. Dry Bulb																							
			65				75				85				95				105				115			
			Entering Indoor Temperature - Degrees F. Wet Bulb																							
			59	63	67	71	59	63	67	71	59	63	67	71	59	63	67	71	59	63	67	71	59	63	67	71
70	1120	MBh	28.0	29.0	31.8	-	27.4	28.4	31.1	-	26.7	27.7	30.3	-	26.1	27.0	29.6	-	24.8	25.7	28.1	-	22.9	23.8	26.1	-
		S/T	0.76	0.64	0.44	-	0.79	0.66	0.46	-	0.81	0.68	0.47	-	0.84	0.70	0.48	-	0.87	0.73	0.50	-	0.88	0.73	0.51	-
		KW	2.54	2.60	2.68	-	2.74	2.79	2.88	-	2.91	2.97	3.06	-	3.05	3.12	3.22	-	3.18	3.25	3.36	-	3.29	3.36	3.48	-
	1000	MBh	27.2	28.2	30.9	-	26.6	27.5	30.2	-	25.9	26.9	29.5	-	25.3	26.2	28.7	-	24.0	24.9	27.3	-	22.3	23.1	25.3	-
		S/T	0.73	0.61	0.42	-	0.75	0.63	0.44	-	0.77	0.65	0.45	-	0.80	0.67	0.46	-	0.83	0.69	0.48	-	0.84	0.70	0.48	-
		KW	2.52	2.58	2.66	-	2.71	2.77	2.86	-	2.88	2.94	3.04	-	3.03	3.10	3.20	-	3.16	3.23	3.33	-	3.26	3.34	3.45	-
	880	MBh	25.8	26.8	29.4	-	25.2	26.2	28.7	-	24.6	25.5	28.0	-	24.0	24.9	27.3	-	22.8	23.7	25.9	-	21.2	21.9	24.0	-
		S/T	0.70	0.58	0.40	-	0.72	0.60	0.42	-	0.74	0.62	0.43	-	0.77	0.64	0.44	-	0.79	0.66	0.46	-	0.80	0.67	0.46	-
		KW	2.48	2.54	2.61	-	2.67	2.73	2.81	-	2.84	2.90	2.99	-	2.98	3.05	3.14	-	3.10	3.17	3.28	-	3.21	3.28	3.39	-
75	1120	MBh	28.5	29.3	31.8	34.1	27.8	28.7	31.0	33.3	27.2	28.0	30.3	32.5	26.5	27.3	29.5	31.7	25.2	25.9	28.1	30.1	23.3	24.0	26.0	27.9
		S/T	0.87	0.78	0.59	0.38	0.90	0.80	0.61	0.39	0.92	0.82	0.62	0.40	0.95	0.85	0.64	0.41	0.99	0.88	0.67	0.43	1.00	0.89	0.67	0.43
		KW	2.56	2.62	2.70	2.78	2.76	2.82	2.91	3.00	2.93	2.99	3.09	3.19	3.08	3.15	3.25	3.36	3.21	3.28	3.39	3.50	3.32	3.39	3.51	3.62
	1000	MBh	27.7	28.5	30.8	33.1	27.0	27.8	30.1	32.3	26.4	27.2	29.4	31.6	25.7	26.5	28.7	30.8	24.5	25.2	27.3	29.2	22.7	23.3	25.2	27.1
		S/T	0.83	0.74	0.56	0.36	0.86	0.77	0.58	0.37	0.88	0.79	0.60	0.38	0.91	0.81	0.61	0.40	0.94	0.84	0.64	0.41	0.95	0.85	0.64	0.41
		KW	2.54	2.60	2.68	2.76	2.74	2.79	2.88	2.98	2.91	2.97	3.06	3.16	3.06	3.12	3.22	3.33	3.18	3.25	3.36	3.47	3.29	3.37	3.48	3.59
	880	MBh	26.3	27.1	29.3	31.4	25.7	26.4	28.6	30.7	25.1	25.8	27.9	30.0	24.5	25.2	27.3	29.2	23.2	23.9	25.9	27.8	21.5	22.2	24.0	25.7
		S/T	0.79	0.71	0.54	0.35	0.82	0.73	0.56	0.36	0.84	0.75	0.57	0.37	0.87	0.78	0.59	0.38	0.90	0.81	0.61	0.39	0.91	0.81	0.62	0.40
		KW	2.50	2.56	2.63	2.72	2.69	2.75	2.84	2.93	2.86	2.92	3.01	3.11	3.01	3.07	3.17	3.27	3.13	3.20	3.30	3.41	3.24	3.31	3.42	3.53
80	1120	MBh	29.0	29.6	31.7	33.9	28.3	29.0	30.9	33.1	27.7	28.3	30.2	32.3	27.0	27.6	29.5	31.5	25.6	26.2	28.0	29.9	23.7	24.3	25.9	27.7
		S/T	0.95	0.89	0.73	0.54	1.00	0.93	0.75	0.56	1.00	0.95	0.77	0.58	1.00	1.00	0.80	0.60	1.00	1.00	0.83	0.62	1.00	1.00	0.83	0.62
		KW	2.58	2.64	2.72	2.81	2.78	2.84	2.93	3.02	2.95	3.02	3.11	3.22	3.11	3.17	3.28	3.39	3.24	3.31	3.42	3.53	3.35	3.42	3.54	3.65
	1000	MBh	28.2	28.8	30.7	32.9	27.5	28.1	30.0	32.1	26.9	27.4	29.3	31.3	26.2	26.8	28.6	30.6	24.9	25.4	27.2	29.0	23.1	23.6	25.2	26.9
		S/T	0.91	0.85	0.69	0.52	0.94	0.88	0.72	0.54	0.96	0.90	0.74	0.55	1.00	0.93	0.76	0.57	1.00	0.97	0.79	0.59	1.00	0.98	0.80	0.59
		KW	2.56	2.62	2.70	2.78	2.76	2.82	2.91	3.00	2.93	2.99	3.09	3.19	3.08	3.15	3.25	3.36	3.21	3.28	3.39	3.50	3.32	3.39	3.51	3.62
	880	MBh	26.8	27.3	29.2	31.2	26.1	26.7	28.5	30.5	25.5	26.1	27.8	29.8	24.9	25.4	27.2	29.0	23.6	24.2	25.8	27.6	21.9	22.4	23.9	25.6
		S/T	0.87	0.82	0.66	0.50	0.90	0.85	0.69	0.51	0.92	0.87	0.71	0.53	0.95	0.89	0.73	0.54	0.99	0.93	0.76	0.56	1.00	0.94	0.76	0.57
		KW	2.52	2.58	2.66	2.74	2.71	2.77	2.86	2.95	2.88	2.94	3.04	3.14	3.03	3.10	3.20	3.30	3.16	3.23	3.33	3.44	3.26	3.34	3.45	3.56
85	1120	MBh	29.5	30.1	31.5	33.6	28.8	29.4	30.8	32.8	28.1	28.7	30.0	32.1	27.5	28.0	29.3	31.3	26.1	26.6	27.8	29.7	24.2	24.6	25.8	27.5
		S/T	1.00	0.96	0.87	0.70	1.00	1.00	0.90	0.73	1.00	1.00	0.92	0.75	1.00	1.00	0.95	0.77	1.00	1.00	0.99	0.80	1.00	1.00	1.00	0.81
		KW	2.60	2.66	2.74	2.83	2.80	2.86	2.95	3.05	2.98	3.04	3.14	3.24	3.13	3.20	3.30	3.41	3.26	3.33	3.44	3.56	3.38	3.45	3.56	3.68
	1000	MBh	28.7	29.2	30.6	32.6	28.0	28.5	29.9	31.9	27.3	27.9	29.2	31.1	26.7	27.2	28.5	30.4	25.3	25.8	27.0	28.8	23.5	23.9	25.0	26.7
		S/T	0.95	0.92	0.83	0.67	0.99	0.95	0.86	0.70	1.00	0.98	0.88	0.71	1.00	1.00	0.91	0.74	1.00	1.00	0.94	0.77	1.00	1.00	0.95	0.77
		KW	2.58	2.64	2.72	2.81	2.78	2.84	2.93	3.02	2.95	3.02	3.11	3.22	3.11	3.17	3.28	3.39	3.24	3.31	3.42	3.53	3.35	3.42	3.54	3.65
	880	MBh	27.2	27.7	29.1	31.0	26.6	27.1	28.4	30.3	26.0	26.5	27.7	29.6	25.3	25.8	27.0	28.8	24.1	24.5	25.7	27.4	22.3	22.7	23.8	25.4
		S/T	0.91	0.88	0.79	0.64	0.94	0.91	0.82	0.67	0.97	0.93	0.84	0.68	1.00	0.96	0.87	0.71	1.00	1.00	0.90	0.73	1.00	1.00	0.91	0.74
		KW	2.54	2.60	2.68	2.76	2.74	2.79	2.88	2.97	2.91	2.97	3.06	3.16	3.05	3.12	3.22	3.33	3.18	3.25	3.36	3.47	3.29	3.36	3.48	3.59

* Entering Indoor Temperature - Degrees F. Dry Bulb

Standard Rating

EXPANDED PERFORMANCE DATA (HEATING) - PH5530AKA

	Outdoor Ambient Temperature - Degrees F. Dry Bulb																	
	65	60	55	50	47	45	40	35	30	25	20	17	15	10	5	0	-5	-10
MBh	35.7	33.7	31.4	29.3	28.0	27.1	25.0	22.9	19.2	17.2	15.1	13.9	13.4	12.0	10.6	9.3	7.9	6.5
T/R	33.0	31.2	29.1	27.1	25.9	25.1	23.1	21.2	17.7	15.9	14.0	12.9	12.4	11.1	9.9	8.6	7.3	6.0
KW	2.75	2.70	2.65	2.59	2.56	2.54	2.49	2.44	2.24	2.20	2.15	2.12	2.10	2.05	2.01	1.96	1.91	1.86
COP	3.80	3.65	3.47	3.31	3.20	3.12	2.93	2.75	2.50	2.29	2.06	1.92	1.86	1.71	1.55	1.39	1.21	1.02
EER	13.0	12.5	11.9	11.3	10.9	10.7	10.0	9.4	8.5	7.8	7.0	6.6	6.4	5.8	5.3	4.7	4.1	3.5

SPECIFICATIONS SUBJECT TO CHANGE WITHOUT NOTICE

EXPANDED PERFORMANCE DATA (COOLING) - PH5536AKA

IDB*	Airflow CFM		Outdoor Ambient Temperature - Degrees F. Dry Bulb																							
			65				75				85				95				105				115			
			Entering Indoor Temperature - Degrees F. Wet Bulb																							
			59	63	67	71	59	63	67	71	59	63	67	71	59	63	67	71	59	63	67	71	59	63	67	71
70	1344	MBh	33.3	34.5	37.8	-	32.5	33.7	37.0	-	31.8	32.9	36.1	-	31.0	32.1	35.2	-	29.4	30.5	33.4	-	27.3	28.3	31.0	-
		S/T	0.78	0.65	0.45	-	0.81	0.68	0.47	-	0.83	0.70	0.48	-	0.86	0.72	0.50	-	0.89	0.74	0.52	-	0.90	0.75	0.52	-
		KW	2.97	3.03	3.12	-	3.19	3.26	3.36	-	3.38	3.45	3.56	-	3.55	3.63	3.75	-	3.70	3.78	3.90	-	3.82	3.91	4.03	-
	1200	MBh	32.3	33.5	36.7	-	31.6	32.7	35.9	-	30.8	32.0	35.0	-	30.1	31.2	34.2	-	28.6	29.6	32.5	-	26.5	27.4	30.1	-
		S/T	0.75	0.62	0.43	-	0.77	0.65	0.45	-	0.79	0.66	0.46	-	0.82	0.68	0.47	-	0.85	0.71	0.49	-	0.86	0.72	0.50	-
		KW	2.95	3.01	3.10	-	3.17	3.23	3.33	-	3.36	3.43	3.54	-	3.53	3.60	3.72	-	3.67	3.75	3.87	-	3.79	3.88	4.00	-
	1056	MBh	30.7	31.9	34.9	-	30.0	31.1	34.1	-	29.3	30.4	33.3	-	28.6	29.6	32.5	-	27.2	28.1	30.8	-	25.2	26.1	28.6	-
		S/T	0.72	0.60	0.41	-	0.74	0.62	0.43	-	0.76	0.64	0.44	-	0.79	0.66	0.45	-	0.81	0.68	0.47	-	0.82	0.69	0.48	-
		KW	2.90	2.96	3.05	-	3.12	3.18	3.28	-	3.30	3.37	3.48	-	3.47	3.54	3.66	-	3.61	3.69	3.81	-	3.73	3.81	3.94	-
75	1344	MBh	33.9	34.9	37.8	40.5	33.1	34.1	36.9	39.6	32.3	33.3	36.0	38.6	31.5	32.5	35.1	37.7	29.9	30.8	33.4	35.8	27.7	28.6	30.9	33.2
		S/T	0.89	0.80	0.60	0.39	0.92	0.83	0.62	0.40	0.95	0.85	0.64	0.41	0.98	0.87	0.66	0.43	1.00	0.91	0.69	0.44	1.00	0.91	0.69	0.45
		KW	2.99	3.05	3.15	3.25	3.22	3.28	3.38	3.49	3.41	3.48	3.59	3.71	3.58	3.66	3.78	3.90	3.73	3.81	3.93	4.06	3.86	3.94	4.07	4.20
	1200	MBh	32.9	33.9	36.7	39.3	32.1	33.1	35.8	38.4	31.4	32.3	35.0	37.5	30.6	31.5	34.1	36.6	29.1	29.9	32.4	34.8	26.9	27.7	30.0	32.2
		S/T	0.85	0.76	0.57	0.37	0.88	0.79	0.60	0.38	0.90	0.81	0.61	0.39	0.93	0.83	0.63	0.41	0.97	0.86	0.65	0.42	0.98	0.87	0.66	0.42
		KW	2.97	3.03	3.12	3.22	3.19	3.26	3.36	3.46	3.38	3.46	3.56	3.68	3.55	3.63	3.75	3.87	3.70	3.78	3.90	4.03	3.83	3.91	4.04	4.17
	1056	MBh	31.3	32.2	34.8	37.4	30.5	31.4	34.0	36.5	29.8	30.7	33.2	35.6	29.1	29.9	32.4	34.8	27.6	28.4	30.8	33.0	25.6	26.3	28.5	30.6
		S/T	0.81	0.73	0.55	0.35	0.84	0.75	0.57	0.37	0.86	0.77	0.59	0.38	0.89	0.80	0.60	0.39	0.93	0.83	0.63	0.40	0.93	0.84	0.63	0.41
		KW	2.93	2.98	3.07	3.17	3.14	3.21	3.30	3.41	3.33	3.40	3.51	3.62	3.50	3.57	3.69	3.80	3.64	3.72	3.84	3.96	3.76	3.84	3.97	4.10
80	1344	MBh	34.5	35.2	37.6	40.2	33.7	34.4	36.8	39.3	32.9	33.6	35.9	38.4	32.1	32.8	35.0	37.4	30.5	31.1	33.3	35.6	28.2	28.8	30.8	32.9
		S/T	1.00	0.92	0.75	0.56	1.00	0.95	0.77	0.58	1.00	1.00	0.79	0.59	1.00	1.00	0.82	0.61	1.00	1.00	0.85	0.63	1.00	1.00	0.86	0.64
		KW	3.02	3.08	3.17	3.27	3.24	3.31	3.41	3.52	3.44	3.51	3.62	3.74	3.61	3.69	3.81	3.93	3.76	3.84	3.97	4.10	3.89	3.97	4.10	4.24
	1200	MBh	33.5	34.2	36.6	39.1	32.7	33.4	35.7	38.2	31.9	32.6	34.9	37.3	31.1	31.8	34.0	36.3	29.6	30.2	32.3	34.5	27.4	28.0	29.9	32.0
		S/T	0.93	0.87	0.71	0.53	0.97	0.91	0.74	0.55	0.99	0.93	0.76	0.56	1.00	0.96	0.78	0.58	1.00	0.99	0.81	0.61	1.00	1.00	0.82	0.61
		KW	2.99	3.05	3.15	3.25	3.22	3.28	3.38	3.49	3.41	3.48	3.59	3.71	3.58	3.66	3.78	3.90	3.73	3.81	3.93	4.06	3.86	3.94	4.07	4.20
	1056	MBh	31.8	32.5	34.7	37.1	31.1	31.7	33.9	36.3	30.3	31.0	33.1	35.4	29.6	30.2	32.3	34.5	28.1	28.7	30.7	32.8	26.0	26.6	28.4	30.4
		S/T	0.89	0.84	0.68	0.51	0.92	0.87	0.71	0.53	0.95	0.89	0.72	0.54	0.98	0.92	0.75	0.56	1.02	0.95	0.78	0.58	1.02	0.96	0.78	0.58
		KW	2.95	3.01	3.10	3.19	3.17	3.23	3.33	3.44	3.36	3.43	3.54	3.65	3.53	3.60	3.72	3.84	3.67	3.75	3.87	4.00	3.79	3.88	4.00	4.13
85	1344	MBh	35.1	35.8	37.5	40.0	34.3	34.9	36.6	39.0	33.5	34.1	35.7	38.1	32.6	33.3	34.8	37.2	31.0	31.6	33.1	35.3	28.7	29.3	30.7	32.7
		S/T	1.00	0.99	0.89	0.72	1.00	1.00	0.92	0.75	1.00	1.00	0.95	0.77	1.00	1.00	0.98	0.79	1.00	1.00	1.00	0.82	1.00	1.00	1.00	0.83
		KW	3.04	3.10	3.20	3.30	3.27	3.33	3.44	3.55	3.47	3.54	3.65	3.77	3.64	3.72	3.84	3.96	3.79	3.87	4.00	4.13	3.92	4.01	4.14	4.27
	1200	MBh	34.1	34.7	36.4	38.8	33.3	33.9	35.5	37.9	32.5	33.1	34.7	37.0	31.7	32.3	33.8	36.1	30.1	30.7	32.1	34.3	27.9	28.4	29.8	31.8
		S/T	0.98	0.94	0.85	0.69	1.00	0.98	0.88	0.72	1.00	1.00	0.90	0.73	1.00	1.00	0.93	0.76	1.00	1.00	0.97	0.79	1.00	1.00	0.98	0.79
		KW	3.02	3.08	3.17	3.27	3.24	3.31	3.41	3.52	3.44	3.51	3.62	3.74	3.61	3.69	3.81	3.93	3.76	3.84	3.97	4.10	3.89	3.97	4.10	4.24
	1056	MBh	32.4	33.0	34.5	36.9	31.6	32.2	33.7	36.0	30.9	31.5	32.9	35.1	30.1	30.7	32.1	34.3	28.6	29.2	30.5	32.6	26.5	27.0	28.3	30.2
		S/T	0.94	0.90	0.81	0.66	0.97	0.94	0.84	0.68	0.99	0.96	0.87	0.70	1.00	0.99	0.89	0.72	1.00	1.00	0.93	0.75	1.00	1.00	0.94	0.76
		KW	2.97	3.03	3.12	3.22	3.19	3.26	3.36	3.46	3.38	3.45	3.56	3.68	3.55	3.63	3.75	3.87	3.70	3.78	3.90	4.03	3.82	3.91	4.03	4.17

* Entering Indoor Temperature - Degrees F. Dry Bulb

Standard Rating

EXPANDED PERFORMANCE DATA (HEATING) - NPH5536AKA

	Outdoor Ambient Temperature - Degrees F. Dry Bulb																	
	65	60	55	50	47	45	40	35	30	25	20	17	15	10	5	0	-5	-10
MBh	42.0	39.7	37.0	34.6	33.0	32.0	29.4	27.0	25.8	23.1	20.3	18.7	18.0	16.2	14.3	12.5	10.7	8.7
T/R	32.4	30.6	28.5	26.7	25.5	24.7	22.7	20.8	19.9	17.8	15.7	14.4	13.9	12.5	11.1	9.6	8.2	6.7
KW	3.37	3.30	3.24	3.18	3.14	3.11	3.05	2.99	2.76	2.70	2.64	2.61	2.59	2.53	2.47	2.41	2.35	2.30
COP	3.66	3.52	3.34	3.18	3.08	3.01	2.82	2.64	2.74	2.50	2.25	2.10	2.04	1.87	1.70	1.51	1.33	1.11
EER	12.5	12.0	11.4	10.9	10.5	10.3	9.6	9.0	9.3	8.5	7.7	7.2	7.0	6.4	5.8	5.2	4.5	3.8

EXPANDED PERFORMANCE DATA (COOLING) - PH5542AKA

Airflow			Outdoor Ambient Temperature - Degrees F. Dry Bulb																							
			65				75				85				95				105				115			
			Entering Indoor Temperature - Degrees F. Wet Bulb																							
IDB*	CFM		59	63	67	71	59	63	67	71	59	63	67	71	59	63	67	71	59	63	67	71	59	63	67	71
70	1568	MBh	39.2	40.6	44.5	-	38.3	39.7	43.5	-	37.4	38.7	42.4	-	36.5	37.8	41.4	-	34.6	35.9	39.3	-	32.1	33.3	36.4	-
		S/T	0.79	0.66	0.46	-	0.82	0.69	0.48	-	0.84	0.70	0.49	-	0.87	0.73	0.50	-	0.90	0.75	0.52	-	0.91	0.76	0.53	-
		KW	3.51	3.58	3.69	-	3.77	3.85	3.97	-	4.00	4.09	4.22	-	4.20	4.29	4.43	-	4.38	4.47	4.62	-	4.53	4.62	4.77	-
	1400	MBh	38.1	39.4	43.2	-	37.2	38.5	42.2	-	36.3	37.6	41.2	-	35.4	36.7	40.2	-	33.6	34.9	38.2	-	31.2	32.3	35.4	-
		S/T	0.76	0.63	0.44	-	0.78	0.66	0.45	-	0.80	0.67	0.47	-	0.83	0.69	0.48	-	0.86	0.72	0.50	-	0.87	0.73	0.50	-
		KW	3.49	3.56	3.66	-	3.74	3.82	3.94	-	3.97	4.05	4.18	-	4.17	4.26	4.40	-	4.34	4.44	4.58	-	4.49	4.59	4.74	-
	1232	MBh	36.2	37.5	41.1	-	35.3	36.6	40.1	-	34.5	35.7	39.1	-	33.6	34.9	38.2	-	31.9	33.1	36.3	-	29.6	30.7	33.6	-
		S/T	0.72	0.61	0.42	-	0.75	0.63	0.43	-	0.77	0.64	0.45	-	0.80	0.66	0.46	-	0.83	0.69	0.48	-	0.83	0.70	0.48	-
		KW	3.43	3.50	3.61	-	3.69	3.76	3.88	-	3.91	3.99	4.12	-	4.10	4.19	4.32	-	4.27	4.36	4.50	-	4.42	4.51	4.66	-
75	1568	MBh	39.9	41.0	44.4	47.7	38.9	40.1	43.4	46.6	38.0	39.1	42.4	45.5	37.1	38.2	41.3	44.4	35.2	36.3	39.3	42.1	32.6	33.6	36.4	39.0
		S/T	0.90	0.81	0.61	0.39	0.93	0.84	0.63	0.41	0.96	0.86	0.65	0.42	0.99	0.88	0.67	0.43	1.00	0.92	0.70	0.45	1.00	0.93	0.70	0.45
		KW	3.54	3.61	3.72	3.84	3.80	3.88	4.00	4.13	4.03	4.12	4.25	4.39	4.24	4.33	4.47	4.61	4.41	4.51	4.65	4.81	4.56	4.66	4.81	4.97
	1400	MBh	38.7	39.8	43.1	46.3	37.8	38.9	42.1	45.2	36.9	38.0	41.1	44.1	36.0	37.1	40.1	43.1	34.2	35.2	38.1	40.9	31.7	32.6	35.3	37.9
		S/T	0.86	0.77	0.58	0.37	0.89	0.80	0.60	0.39	0.91	0.82	0.62	0.40	0.94	0.84	0.64	0.41	0.98	0.88	0.66	0.43	0.99	0.88	0.67	0.43
		KW	3.51	3.58	3.69	3.81	3.77	3.85	3.97	4.10	4.00	4.09	4.22	4.35	4.21	4.30	4.43	4.58	4.38	4.47	4.62	4.77	4.53	4.62	4.77	4.93
	1232	MBh	36.8	37.9	41.0	44.0	35.9	37.0	40.0	43.0	35.1	36.1	39.1	41.9	34.2	35.2	38.1	40.9	32.5	33.5	36.2	38.9	30.1	31.0	33.5	36.0
		S/T	0.82	0.74	0.56	0.36	0.85	0.76	0.58	0.37	0.88	0.78	0.59	0.38	0.90	0.81	0.61	0.39	0.94	0.84	0.64	0.41	0.95	0.85	0.64	0.41
		KW	3.46	3.53	3.64	3.75	3.71	3.79	3.91	4.03	3.94	4.02	4.15	4.28	4.14	4.23	4.36	4.50	4.31	4.40	4.54	4.69	4.45	4.55	4.70	4.85
80	1568	MBh	40.6	41.5	44.3	47.3	39.6	40.5	43.3	46.2	38.7	39.5	42.2	45.1	37.7	38.6	41.2	44.0	35.9	36.6	39.1	41.8	33.2	33.9	36.3	38.8
		S/T	1.00	0.93	0.76	0.56	1.00	0.96	0.78	0.58	1.00	1.00	0.80	0.60	1.00	1.00	0.83	0.62	1.00	1.00	0.86	0.64	1.00	1.00	0.87	0.65
		KW	3.57	3.64	3.75	3.87	3.83	3.91	4.03	4.16	4.07	4.15	4.28	4.42	4.27	4.37	4.51	4.65	4.45	4.55	4.69	4.85	4.60	4.70	4.85	5.02
	1400	MBh	39.4	40.2	43.0	46.0	38.5	39.3	42.0	44.9	37.6	38.4	41.0	43.8	36.6	37.4	40.0	42.8	34.8	35.6	38.0	40.6	32.2	32.9	35.2	37.6
		S/T	0.94	0.88	0.72	0.54	0.98	0.92	0.75	0.56	1.00	0.94	0.77	0.57	1.00	0.97	0.79	0.59	1.00	1.00	0.82	0.61	1.00	1.00	0.83	0.62
		KW	3.54	3.61	3.72	3.84	3.80	3.88	4.00	4.13	4.04	4.12	4.25	4.39	4.24	4.33	4.47	4.61	4.41	4.51	4.65	4.81	4.56	4.66	4.81	4.97
	1232	MBh	37.4	38.2	40.9	43.7	36.5	37.3	39.9	42.7	35.7	36.5	39.0	41.6	34.8	35.6	38.0	40.6	33.1	33.8	36.1	38.6	30.6	31.3	33.4	35.7
		S/T	0.90	0.85	0.69	0.52	0.94	0.88	0.71	0.53	0.96	0.90	0.73	0.55	0.99	0.93	0.76	0.57	1.03	0.96	0.79	0.59	1.04	0.97	0.79	0.59
		KW	3.49	3.56	3.66	3.78	3.74	3.82	3.94	4.06	3.97	4.05	4.18	4.32	4.17	4.26	4.40	4.54	4.34	4.44	4.58	4.73	4.49	4.59	4.74	4.89
85	1568	MBh	41.3	42.1	44.1	47.0	40.3	41.1	43.0	45.9	39.4	40.1	42.0	44.8	38.4	39.1	41.0	43.7	36.5	37.2	38.9	41.5	33.8	34.4	36.1	38.5
		S/T	1.00	1.00	0.90	0.73	1.00	1.00	0.94	0.76	1.00	1.00	0.96	0.78	1.00	1.00	0.99	0.80	1.00	1.00	1.00	0.83	1.00	1.00	1.00	0.84
		KW	3.59	3.67	3.78	3.90	3.86	3.94	4.07	4.20	4.10	4.19	4.32	4.46	4.31	4.40	4.54	4.69	4.49	4.58	4.73	4.89	4.64	4.74	4.89	5.06
	1400	MBh	40.1	40.9	42.8	45.6	39.1	39.9	41.8	44.6	38.2	39.0	40.8	43.5	37.3	38.0	39.8	42.5	35.4	36.1	37.8	40.3	32.8	33.4	35.0	37.4
		S/T	0.99	0.95	0.86	0.70	1.00	0.99	0.89	0.72	1.00	1.00	0.92	0.74	1.00	1.00	0.94	0.77	1.00	1.00	0.98	0.80	1.00	1.00	0.99	0.80
		KW	3.57	3.64	3.75	3.87	3.83	3.91	4.03	4.16	4.07	4.15	4.28	4.42	4.27	4.37	4.51	4.65	4.45	4.55	4.69	4.85	4.60	4.70	4.85	5.02
	1232	MBh	38.1	38.8	40.6	43.4	37.2	37.9	39.7	42.4	36.3	37.0	38.8	41.3	35.4	36.1	37.8	40.3	33.6	34.3	35.9	38.3	31.2	31.8	33.3	35.5
		S/T	0.95	0.91	0.83	0.67	0.98	0.95	0.86	0.69	1.00	0.97	0.88	0.71	1.00	1.00	0.91	0.73	1.00	1.00	0.94	0.76	1.00	1.00	0.95	0.77
		KW	3.51	3.58	3.69	3.81	3.77	3.85	3.97	4.10	4.00	4.09	4.22	4.35	4.20	4.29	4.43	4.58	4.38	4.47	4.62	4.77	4.53	4.62	4.77	4.93

* Entering Indoor Temperature - Degrees F. Dry Bulb

Standard Rating

EXPANDED PERFORMANCE DATA (HEATING) - PH5542AKA

	Outdoor Ambient Temperature - Degrees F. Dry Bulb																	
	65	60	55	50	47	45	40	35	30	25	20	17	15	10	5	0	-5	-10
MBh	58.0	54.7	51.0	47.6	45.5	44.1	40.6	37.2	34.2	30.6	27.0	24.8	23.9	21.4	19.0	16.6	14.1	11.6
T/R	38.3	36.2	33.7	31.5	30.1	29.2	26.8	24.6	22.6	20.2	17.8	16.4	15.8	14.2	12.6	11.0	9.3	7.7
KW	4.48	4.39	4.30	4.22	4.17	4.13	4.05	3.96	3.89	3.81	3.72	3.67	3.64	3.55	3.46	3.38	3.29	3.20
COP	3.79	3.65	3.47	3.31	3.20	3.12	2.94	2.75	2.57	2.35	2.12	1.98	1.92	1.77	1.61	1.44	1.26	1.06
EER	12.9	12.5	11.9	11.3	10.9	10.7	10.0	9.4	8.8	8.0	7.3	6.8	6.6	6.0	5.5	4.9	4.3	3.6

SPECIFICATIONS SUBJECT TO CHANGE WITHOUT NOTICE

EXPANDED PERFORMANCE DATA (COOLING) - PH5548AKA

IDB*	Airflow CFM		Outdoor Ambient Temperature - Degrees F. Dry Bulb																							
			65				75				85				95				105				115			
			Entering Indoor Temperature - Degrees F. Wet Bulb																							
			59	63	67	71	59	63	67	71	59	63	67	71	59	63	67	71	59	63	67	71	59	63	67	71
70	1792	MBh	44.1	45.7	50.1	-	43.1	44.6	48.9	-	42.0	43.6	47.7	-	41.0	42.5	46.6	-	39.0	40.4	44.3	-	36.1	37.4	41.0	-
		S/T	0.79	0.66	0.46	-	0.82	0.69	0.48	-	0.84	0.70	0.49	-	0.87	0.73	0.50	-	0.90	0.75	0.52	-	0.91	0.76	0.53	-
		KW	3.90	3.98	4.10	-	4.19	4.27	4.40	-	4.44	4.53	4.67	-	4.66	4.76	4.90	-	4.84	4.95	5.10	-	5.01	5.11	5.28	-
	1600	MBh	42.8	44.4	48.6	-	41.8	43.3	47.5	-	40.8	42.3	46.4	-	39.8	41.3	45.2	-	37.8	39.2	43.0	-	35.0	36.3	39.8	-
		S/T	0.76	0.63	0.44	-	0.78	0.66	0.45	-	0.80	0.67	0.47	-	0.83	0.69	0.48	-	0.86	0.72	0.50	-	0.87	0.73	0.50	-
		KW	3.87	3.95	4.07	-	4.15	4.24	4.37	-	4.40	4.49	4.63	-	4.62	4.72	4.87	-	4.81	4.91	5.06	-	4.97	5.07	5.24	-
	1408	MBh	40.7	42.2	46.2	-	39.7	41.2	45.1	-	38.8	40.2	44.0	-	37.8	39.2	43.0	-	35.9	37.3	40.8	-	33.3	34.5	37.8	-
		S/T	0.72	0.61	0.42	-	0.75	0.63	0.43	-	0.77	0.64	0.45	-	0.80	0.66	0.46	-	0.83	0.69	0.48	-	0.83	0.70	0.48	-
		KW	3.82	3.89	4.01	-	4.09	4.17	4.30	-	4.33	4.42	4.56	-	4.55	4.64	4.79	-	4.73	4.83	4.98	-	4.89	4.99	5.15	-
75	1792	MBh	44.8	46.2	50.0	53.6	43.8	45.1	48.8	52.4	42.8	44.0	47.7	51.1	41.7	42.9	46.5	49.9	39.6	40.8	44.2	47.4	36.7	37.8	40.9	43.9
		S/T	0.90	0.81	0.61	0.39	0.93	0.84	0.63	0.41	0.96	0.86	0.65	0.42	0.99	0.88	0.67	0.43	1.00	0.92	0.70	0.45	1.00	0.93	0.70	0.45
		KW	3.93	4.01	4.13	4.26	4.22	4.30	4.44	4.57	4.47	4.56	4.71	4.86	4.69	4.79	4.94	5.10	4.88	4.99	5.15	5.31	5.05	5.16	5.32	5.50
	1600	MBh	43.5	44.8	48.5	52.1	42.5	43.8	47.4	50.9	41.5	42.7	46.3	49.7	40.5	41.7	45.1	48.4	38.5	39.6	42.9	46.0	35.6	36.7	39.7	42.6
		S/T	0.86	0.77	0.58	0.37	0.89	0.80	0.60	0.39	0.91	0.82	0.62	0.40	0.94	0.84	0.64	0.41	0.98	0.88	0.66	0.43	0.99	0.88	0.67	0.43
		KW	3.90	3.98	4.10	4.22	4.19	4.27	4.40	4.54	4.44	4.53	4.67	4.82	4.66	4.76	4.91	5.06	4.85	4.95	5.11	5.27	5.01	5.12	5.28	5.45
	1408	MBh	41.4	42.6	46.1	49.5	40.4	41.6	45.0	48.3	39.4	40.6	44.0	47.2	38.5	39.6	42.9	46.0	36.6	37.6	40.7	43.7	33.9	34.9	37.7	40.5
		S/T	0.82	0.74	0.56	0.36	0.85	0.76	0.58	0.37	0.88	0.78	0.59	0.38	0.90	0.81	0.61	0.39	0.94	0.84	0.64	0.41	0.95	0.85	0.64	0.41
		KW	3.84	3.92	4.04	4.16	4.12	4.21	4.33	4.47	4.37	4.46	4.60	4.74	4.58	4.68	4.83	4.98	4.77	4.87	5.02	5.19	4.93	5.03	5.19	5.36
80	1792	MBh	45.6	46.6	49.8	53.3	44.6	45.6	48.7	52.0	43.5	44.5	47.5	50.8	42.5	43.4	46.4	49.5	40.3	41.2	44.0	47.1	37.4	38.2	40.8	43.6
		S/T	1.00	0.93	0.76	0.56	1.00	0.96	0.78	0.58	1.00	1.00	0.80	0.60	1.00	1.00	0.83	0.62	1.00	1.00	0.86	0.64	1.00	1.00	0.87	0.65
		KW	3.96	4.04	4.16	4.29	4.25	4.34	4.47	4.61	4.51	4.60	4.74	4.89	4.73	4.83	4.98	5.15	4.92	5.03	5.19	5.36	5.09	5.20	5.37	5.54
	1600	MBh	44.3	45.3	48.4	51.7	43.3	44.2	47.3	50.5	42.3	43.2	46.1	49.3	41.2	42.1	45.0	48.1	39.2	40.0	42.8	45.7	36.3	37.1	39.6	42.3
		S/T	0.94	0.88	0.72	0.54	0.98	0.92	0.75	0.56	1.00	0.94	0.77	0.57	1.00	0.97	0.79	0.59	1.00	1.00	0.82	0.61	1.00	1.00	0.83	0.62
		KW	3.93	4.01	4.13	4.26	4.22	4.31	4.44	4.58	4.47	4.56	4.71	4.86	4.69	4.79	4.95	5.10	4.88	4.99	5.15	5.31	5.05	5.16	5.32	5.50
	1408	MBh	42.1	43.0	46.0	49.1	41.1	42.0	44.9	48.0	40.1	41.0	43.8	46.8	39.2	40.0	42.8	45.7	37.2	38.0	40.6	43.4	34.5	35.2	37.6	40.2
		S/T	0.90	0.85	0.69	0.52	0.94	0.88	0.71	0.53	0.96	0.90	0.73	0.55	0.99	0.93	0.76	0.57	1.03	0.96	0.79	0.59	1.04	0.97	0.79	0.59
		KW	3.87	3.95	4.07	4.19	4.15	4.24	4.37	4.50	4.40	4.49	4.63	4.78	4.62	4.72	4.87	5.02	4.81	4.91	5.06	5.23	4.97	5.07	5.24	5.41
85	1792	MBh	46.4	47.3	49.6	52.9	45.4	46.2	48.4	51.7	44.3	45.1	47.3	50.4	43.2	44.0	46.1	49.2	41.0	41.8	43.8	46.7	38.0	38.8	40.6	43.3
		S/T	1.00	1.00	0.90	0.73	1.00	1.00	0.94	0.76	1.00	1.00	0.96	0.78	1.00	1.00	0.99	0.80	1.00	1.00	1.00	0.83	1.00	1.00	1.00	0.84
		KW	3.99	4.07	4.19	4.32	4.28	4.37	4.51	4.65	4.54	4.64	4.78	4.93	4.77	4.87	5.02	5.19	4.96	5.07	5.23	5.40	5.13	5.24	5.41	5.59
	1600	MBh	45.1	46.0	48.1	51.4	44.0	44.9	47.0	50.2	43.0	43.8	45.9	49.0	41.9	42.8	44.8	47.8	39.8	40.6	42.5	45.4	36.9	37.6	39.4	42.0
		S/T	0.99	0.95	0.86	0.70	1.00	0.99	0.89	0.72	1.00	1.00	0.92	0.74	1.00	1.00	0.94	0.77	1.00	1.00	0.98	0.80	1.00	1.00	0.99	0.80
		KW	3.96	4.04	4.16	4.29	4.25	4.34	4.47	4.61	4.51	4.60	4.74	4.89	4.73	4.83	4.98	5.15	4.92	5.03	5.19	5.36	5.09	5.20	5.37	5.54
	1408	MBh	42.8	43.7	45.7	48.8	41.8	42.6	44.7	47.6	40.8	41.6	43.6	46.5	39.8	40.6	42.5	45.4	37.9	38.6	40.4	43.1	35.1	35.7	37.4	39.9
		S/T	0.95	0.91	0.83	0.67	0.98	0.95	0.86	0.69	1.00	0.97	0.88	0.71	1.00	1.00	0.91	0.73	1.00	1.00	0.94	0.76	1.00	1.00	0.95	0.77
		KW	3.90	3.98	4.10	4.22	4.19	4.27	4.40	4.54	4.44	4.53	4.67	4.82	4.66	4.76	4.90	5.06	4.84	4.95	5.10	5.27	5.01	5.11	5.28	5.45

* Entering Indoor Temperature - Degrees F. Dry Bulb

Standard Rating

EXPANDED PERFORMANCE DATA (HEATING) - PH5548AKA

	Outdoor Ambient Temperature - Degrees F. Dry Bulb																	
	65	60	55	50	47	45	40	35	30	25	20	17	15	10	5	0	-5	-10
MBh	58.0	54.7	51.0	47.6	45.5	44.1	40.6	37.2	37.2	33.3	29.4	27.0	26.0	23.3	20.7	18.0	15.4	12.6
T/R	33.5	31.6	29.5	27.6	26.3	25.5	23.5	21.5	21.5	19.3	17.0	15.6	15.0	13.5	12.0	10.4	8.9	7.3
KW	4.61	4.52	4.44	4.35	4.30	4.26	4.18	4.09	3.99	3.90	3.82	3.77	3.73	3.65	3.56	3.48	3.39	3.31
COP	3.68	3.54	3.36	3.21	3.10	3.03	2.84	2.66	2.73	2.50	2.25	2.10	2.04	1.87	1.70	1.52	1.33	1.12
EER	12.6	12.1	11.5	11.0	10.6	10.3	9.7	9.1	9.3	8.5	7.7	7.2	7.0	6.4	5.8	5.2	4.5	3.8

EXPANDED PERFORMANCE DATA (COOLING) - PH5560AKA

Airflow			Outdoor Ambient Temperature - Degrees F. Dry Bulb																							
			65				75				85				95				105				115			
			Entering Indoor Temperature - Degrees F. Wet Bulb																							
IDB*	CFM		59	63	67	71	59	63	67	71	59	63	67	71	59	63	67	71	59	63	67	71	59	63	67	71
70	2128	MBh	53.9	55.9	61.2	-	52.6	54.6	59.8	-	51.4	53.3	58.4	-	50.1	52.0	56.9	-	47.6	49.4	54.1	-	44.1	45.7	50.1	-
		S/T	0.78	0.65	0.45	-	0.81	0.68	0.47	-	0.83	0.70	0.48	-	0.86	0.72	0.50	-	0.89	0.74	0.52	-	0.90	0.75	0.52	-
		KW	5.22	5.33	5.50	-	5.61	5.73	5.91	-	5.96	6.09	6.28	-	6.26	6.40	6.60	-	6.52	6.66	6.88	-	6.74	6.89	7.12	-
	1900	MBh	52.3	54.2	59.4	-	51.1	53.0	58.0	-	49.9	51.7	56.7	-	48.7	50.5	55.3	-	46.2	47.9	52.5	-	42.8	44.4	48.6	-
		S/T	0.75	0.62	0.43	-	0.77	0.65	0.45	-	0.79	0.66	0.46	-	0.82	0.68	0.47	-	0.85	0.71	0.49	-	0.86	0.72	0.50	-
		KW	5.18	5.29	5.45	-	5.57	5.69	5.86	-	5.91	6.04	6.23	-	6.21	6.35	6.55	-	6.47	6.61	6.82	-	6.69	6.84	7.06	-
	1672	MBh	49.7	51.5	56.4	-	48.6	50.3	55.1	-	47.4	49.1	53.8	-	46.2	47.9	52.5	-	43.9	45.5	49.9	-	40.7	42.2	46.2	-
		S/T	0.72	0.60	0.41	-	0.74	0.62	0.43	-	0.76	0.64	0.44	-	0.79	0.66	0.45	-	0.81	0.68	0.47	-	0.82	0.69	0.48	-
		KW	5.11	5.21	5.37	-	5.48	5.60	5.77	-	5.82	5.94	6.13	-	6.11	6.24	6.44	-	6.36	6.50	6.71	-	6.58	6.72	6.94	-
75	2128	MBh	54.8	56.4	61.1	65.6	53.5	55.1	59.7	64.0	52.3	53.8	58.2	62.5	51.0	52.5	56.8	61.0	48.4	49.9	54.0	57.9	44.9	46.2	50.0	53.7
		S/T	0.89	0.80	0.60	0.39	0.92	0.83	0.62	0.40	0.95	0.85	0.64	0.41	0.98	0.87	0.66	0.43	1.00	0.91	0.69	0.44	1.00	0.91	0.69	0.45
		KW	5.27	5.37	5.54	5.71	5.66	5.78	5.96	6.15	6.01	6.14	6.33	6.54	6.31	6.45	6.66	6.88	6.58	6.72	6.94	7.17	6.80	6.95	7.18	7.42
	1900	MBh	53.2	54.8	59.3	63.6	52.0	53.5	57.9	62.2	50.7	52.2	56.5	60.7	49.5	51.0	55.2	59.2	47.0	48.4	52.4	56.2	43.6	44.8	48.5	52.1
		S/T	0.85	0.76	0.57	0.37	0.88	0.79	0.60	0.38	0.90	0.81	0.61	0.39	0.93	0.83	0.63	0.41	0.97	0.86	0.65	0.42	0.98	0.87	0.66	0.42
		KW	5.23	5.33	5.50	5.67	5.62	5.73	5.91	6.10	5.96	6.09	6.28	6.48	6.26	6.40	6.60	6.82	6.52	6.66	6.88	7.11	6.75	6.89	7.12	7.35
	1672	MBh	50.6	52.0	56.3	60.5	49.4	50.8	55.0	59.1	48.2	49.6	53.7	57.7	47.0	48.4	52.4	56.2	44.7	46.0	49.8	53.4	41.4	42.6	46.1	49.5
		S/T	0.81	0.73	0.55	0.35	0.84	0.75	0.57	0.37	0.86	0.77	0.59	0.38	0.89	0.80	0.60	0.39	0.93	0.83	0.63	0.40	0.93	0.84	0.63	0.41
		KW	5.15	5.25	5.41	5.58	5.53	5.64	5.82	6.00	5.86	5.99	6.18	6.38	6.16	6.29	6.50	6.71	6.42	6.55	6.77	6.99	6.63	6.78	7.00	7.23
80	2128	MBh	55.8	57.0	60.9	65.1	54.5	55.7	59.5	63.6	53.2	54.4	58.1	62.1	51.9	53.0	56.7	60.6	49.3	50.4	53.8	57.5	45.7	46.7	49.9	53.3
		S/T	1.00	0.92	0.75	0.56	1.00	0.95	0.77	0.58	1.00	1.00	0.79	0.59	1.00	1.00	0.82	0.61	1.00	1.00	0.85	0.63	1.00	1.00	0.86	0.64
		KW	5.31	5.42	5.58	5.76	5.70	5.82	6.01	6.20	6.06	6.19	6.38	6.59	6.37	6.50	6.71	6.93	6.63	6.77	6.99	7.23	6.86	7.01	7.24	7.48
	1900	MBh	54.2	55.3	59.1	63.2	52.9	54.1	57.8	61.7	51.6	52.8	56.4	60.3	50.4	51.5	55.0	58.8	47.9	48.9	52.3	55.9	44.3	45.3	48.4	51.7
		S/T	0.93	0.87	0.71	0.53	0.97	0.91	0.74	0.55	0.99	0.93	0.76	0.56	1.00	0.96	0.78	0.58	1.00	0.99	0.81	0.61	1.00	1.00	0.82	0.61
		KW	5.27	5.37	5.54	5.71	5.66	5.78	5.96	6.15	6.01	6.14	6.33	6.54	6.32	6.45	6.66	6.88	6.58	6.72	6.94	7.17	6.80	6.95	7.18	7.42
	1672	MBh	51.5	52.6	56.2	60.0	50.3	51.4	54.9	58.6	49.1	50.1	53.6	57.3	47.9	48.9	52.3	55.9	45.5	46.5	49.6	53.1	42.1	43.0	46.0	49.2
		S/T	0.89	0.84	0.68	0.51	0.92	0.87	0.71	0.53	0.95	0.89	0.72	0.54	0.98	0.92	0.75	0.56	1.02	0.95	0.78	0.58	1.02	0.96	0.78	0.58
		KW	5.18	5.29	5.45	5.62	5.57	5.69	5.86	6.05	5.91	6.04	6.23	6.43	6.21	6.35	6.55	6.76	6.47	6.61	6.82	7.05	6.69	6.84	7.06	7.29
85	2128	MBh	56.8	57.9	60.6	64.6	55.4	56.5	59.2	63.1	54.1	55.2	57.8	61.6	52.8	53.8	56.4	60.1	50.2	51.1	53.5	57.1	46.5	47.4	49.6	52.9
		S/T	1.00	0.99	0.89	0.72	1.00	1.00	0.92	0.75	1.00	1.00	0.95	0.77	1.00	1.00	0.98	0.79	1.00	1.00	1.00	0.82	1.00	1.00	1.00	0.83
		KW	5.35	5.46	5.63	5.80	5.75	5.87	6.06	6.25	6.10	6.24	6.43	6.64	6.42	6.56	6.77	6.99	6.68	6.83	7.05	7.29	6.91	7.07	7.30	7.54
	1900	MBh	55.1	56.2	58.8	62.8	53.8	54.9	57.5	61.3	52.5	53.6	56.1	59.8	51.3	52.3	54.7	58.4	48.7	49.6	52.0	55.5	45.1	46.0	48.2	51.4
		S/T	0.98	0.94	0.85	0.69	1.00	0.98	0.88	0.72	1.00	1.00	0.90	0.73	1.00	1.00	0.93	0.76	1.00	1.00	0.97	0.79	1.00	1.00	0.98	0.79
		KW	5.31	5.42	5.58	5.76	5.70	5.82	6.01	6.20	6.06	6.19	6.38	6.59	6.37	6.50	6.71	6.93	6.63	6.77	6.99	7.23	6.86	7.01	7.24	7.48
	1672	MBh	52.3	53.4	55.9	59.6	51.1	52.1	54.6	58.2	49.9	50.9	53.3	56.9	48.7	49.6	52.0	55.5	46.3	47.2	49.4	52.7	42.9	43.7	45.8	48.8
		S/T	0.94	0.90	0.81	0.66	0.97	0.94	0.84	0.68	0.99	0.96	0.87	0.70	1.00	0.99	0.89	0.72	1.00	1.00	0.93	0.75	1.00	1.00	0.94	0.76
		KW	5.22	5.33	5.50	5.67	5.61	5.73	5.91	6.10	5.96	6.09	6.28	6.48	6.26	6.40	6.60	6.82	6.52	6.66	6.88	7.11	6.74	6.89	7.12	7.35

* Entering Indoor Temperature - Degrees F. Dry Bulb

Standard Rating

EXPANDED PERFORMANCE DATA (HEATING) - PH5560AKA

	Outdoor Ambient Temperature - Degrees F. Dry Bulb																	
	65	60	55	50	47	45	40	35	30	25	20	17	15	10	5	0	-5	-10
MBh	76.4	72.1	67.3	62.8	60.0	58.1	53.5	49.1	46.9	42.0	37.0	34.0	32.7	29.4	26.0	22.7	19.4	15.9
T/R	37.3	35.1	32.8	30.6	29.2	28.3	26.1	23.9	22.8	20.4	18.0	16.6	16.0	14.3	12.7	11.1	9.4	7.7
KW	5.37	5.27	5.17	5.08	5.02	4.98	4.88	4.78	4.79	4.68	4.58	4.52	4.48	4.38	4.28	4.18	4.08	3.98
COP	4.16	4.00	3.80	3.62	3.50	3.42	3.21	3.00	2.87	2.62	2.36	2.20	2.14	1.96	1.78	1.59	1.39	1.17
EER	14.2	13.7	13.0	12.4	12.0	11.7	11.0	10.3	9.8	9.0	8.1	7.5	7.3	6.7	6.1	5.4	4.8	4.0

ELECTRICAL DATA TABLE: STRIP HEATERS

HEATER MODEL	Used With	Supply Voltage	KW Rating	Nominal Heating BTUH	Supply Circuit No.	Heater Amps	Mininum Circuit Ampacity	Maximum Overcurrent Protective Device (Amps)
AMMK05AHA AMMK05AHB	2 - 5 Ton	240-1-60	4.8	16,382	L3 - L4	20.0	25.0	30
		208-1-60	3.6	12,287	L3 - L4	17.3	21.6	25
AMMK07AHA	2 - 5 Ton	240-1-60	7.5	25,598	L3-L4	31.2	39.0	45
AMMK07AHB		208-1-60	5.6	19,113	L3-L4	26.9	33.6	40
AMMK10AHA	2 - 5 Ton	240-1-60	9.6	32,765	L3 - L4	40.0	50.0	60
AMMK10AHB		208-1-60	7.2	24,574	L5 - L6	34.6	43.3	50
AMMK15AHB	2 1/2 - 5 Ton	240-1-60	14.4	49,147	L3 - L4 L5 - L6	40.0 20.0	50.0 25.0	60 30
		208-1-60	10.8	36,860	L3 - L4 L5 - L6	34.6 17.3	43.3 21.6	50 25
AMMK20AHB	2 1/2 - 5 Ton	240-1-60	19.2	65,530	L3 - L4 L5 - L6	40.0 40.0	50.0 50.0	60 60
		208-1-60	14.4	49,147	L3 - L4 L5 - L6	34.6 34.6	43.3 43.3	50 50

PERFORMANCE DATA: ELECTRIC HEAT ACCESSORY

Heater Model	Use With	Supply Voltage	KW Rating	Total Heating BTUH	*Temperature Rise °F @ CFM								
					600	800	1000	1200	1400	1600	1800	2000	2200
AMMK05AHA	2 - 5 Ton	240-1-60	4.8	16,832	25.3	19.0	15.2	12.6	10.8	9.5	8.4	7.6	---
AMMK05AHB		208-1-60	3.6	12,287	19.0	14.2	11.4	9.5	8.1	7.1	6.3	5.7	---
AMMK07AHA	2 - 5 Ton	240-1-60	7.5	25,598	39.5	29.6	23.7	19.8	16.9	14.8	13.2	11.9	10.8
AMMK07AHB		208-1-60	5.6	19,113	29.5	22.1	17.7	14.7	12.6	11.1	9.8	8.8	8.0
AMMK10AHA	2 - 5 Ton	240-1-60	9.6	32,765	50.6	37.9	30.3	25.3	21.7	19.0	16.9	15.2	13.8
AMMK10AHB		208-1-60	7.2	24,574	37.9	28.4	22.8	19.0	16.3	14.2	12.6	11.4	10.3
AMMK15AHB	2 1/2 - 5 Ton**	240-1-60	14.4	49,147	---	56.9	45.5	37.9	32.5	28.4	25.3	22.8	20.7
		208-1-60	10.8	36.860	56.9	42.7	34.1	28.4	24.4	21.3	19.0	17.1	15.5
AMMK20AHB	2 1/2 - 5 Ton***	240-1-60	19.2	65,530	---	---	---	50.6	43.3	37.9	33.7	30.3	27.6
		208-1-60	14.4	49,147	---	56.9	45.5	37.9	32.5	28.4	25.3	22.8	20.7

* Temperature Rise Must Not Exceed 60° F (Electric Heat Only) .
** 15 Kw Heater Not To Be Operated On Low Blower Speed Tap For 2 1/2 Ton Unit.
*** 20 Kw Heater Not To Be Operated On Low Or Med. Low Blower Speed Tap For 3 and 3 1/2 Ton Units.

SERIES ACCESSORIES

Model No.	Description	
NACA001DK	BASIC FLEXIBLE DUCT INSTALLATION KIT. For SINGLE Return & SINGLE Supply application Includes:1- 12" x 7ft & 1- 14" x 5ft flex duct, screw clamps & one 12"x20" Floor Ret. Grill, plenum & 18" x 18" Permanent Filter, 1 - 12" dovetail adapter.	
NACA002DK	DOUBLE SUPPLY DUCT KITTo be used with NACA001DK. For double wide home where 2 supply trunklines are used. Adapts 1-12" supply to 2-10" trunks. Includes: 1- 10"x14ft flex duct;1-Insulated Wye (12x10x10), 2-10" adaptors & 4-10" clamps.	
NAXA001DK	DOUBLE RETURN DUCT KITTo be used with NACA001DK. Required with 3 1/2 - 5 ton units for airflow and optional for use in double wide homes. Includes: one 12"x20" Floor Ret.Grill, plenum & 18" x 18" Permanent Filter; 1-14"x14' flex duct; 1- 14"x14" Insulated Wye & 4-14" clamps	
NACA003DK	FLEXIBLE DUCT KIT. Includes: 1- 12" x 10' flex duct with 4" collars on both ends. 1- 14" x 5' flex duct with 4" collars on both ends. 2- 12" duct clamps - gear drive, 2- 14"duct clamps - gear drive.	
AMM001DSA	DISCONNECT SWITCH BREAKER FOR UNIT ONLY	
NAMA001SC	Start Assist Kit	
NAXA006OT	Outdoor Thermostat Kit	
AMMK05AHB	4.8 KW STRIP HEATER **WITH BREAKER**. (* ORDER UNIT BREAKER SEPERATELY)	(Single Phase)
AMMK07AHB	7.5 KW STRIP HEATER **WITH BREAKER**. (* ORDER UNIT BREAKER SEPERATELY)	(Single Phase)
AMMK10AHB	9.6 KW STRIP HEATER **WITH BREAKER**. (* ORDER UNIT BREAKER SEPERATELY)	(Single Phase)
AMMK15AHB	14.4 KW STRIP HEATER **WITH BREAKER**. (* ORDER UNIT BREAKER SEPERATELY)	(Single Phase)
AMMK20AHB	19.2 KW STRIP HEATER **WITH BREAKER**. (* ORDER UNIT BREAKER SEPERATELY)	(Single Phase)
AMMK05AHA	4.8 KW STRIP HEATER **PIGTAIL CONNECTION ONLY, NO BREAKER**.	(Single Phase)
AMMK07AHA	7.5 KW STRIP HEATER **PIGTAIL CONNECTION ONLY, NO BREAKER**.	(Single Phase)
AMMK10AHA	9.6 KW STRIP HEATER **PIGTAIL CONNECTION ONLY, NO BREAKER.**	(Single Phase)

SPECIFICATIONS SUBJECT TO CHANGE WITHOUT NOTICE

UNIT CIRCUIT BREAKERS - (REQUIRED WITH BREAKER STYLE HEATER FOR UNIT DISCONNECT FEATURE ORDER FROM SERVICE PARTS

Breaker Amps	Part Number	Application
20	1082007	N/A
25	1082008	2 TON
30	1082009	$2^1/_2$ TON
35	1082010	3 TON
40	1082011	N/A
45	1082012	N/A
50	1082013	$3^1/_2$ - 4 TON
60	1082014	N/A
60 Switch	1082042	Fits All - Disconnect Switch Only (No Over Current Protection)
AMM001DSA	DISCONNECT SWITCH KIT (includes 60A switch & rain shield) BREAKER FOR UNIT ONLY. FOR "NO HEAT" or PIGTAIL STYLE HEATER APPLICATION ONLY.	

COOLING MODEL NUMBER IDENTIFICATION GUIDE

MODEL NUMBER N P H 5 5 24 A K A

BRAND INDICATOR

SALES REVISION CODE

PRODUCT FAMILY
P - PACKAGE

VOLTAGE
K=208/230-1-60

PRODUCT TYPE
A - A/C
H - HEAT PUMP

FEATURES

CAPACITY MBTUH

GROUP
5 - Standard Efficiency
9 - High Eficiency

SERIES

UNIT DIMENSIONS

NOTE: DUCT COLLARS ATTACHED TO SUPPLY AND RETURN MUST BE REVERSED AT INSTALLATION.

ALL DIMENSIONS IN INCHES

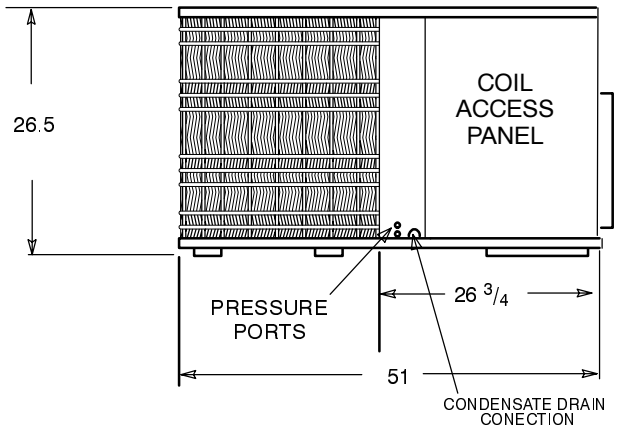

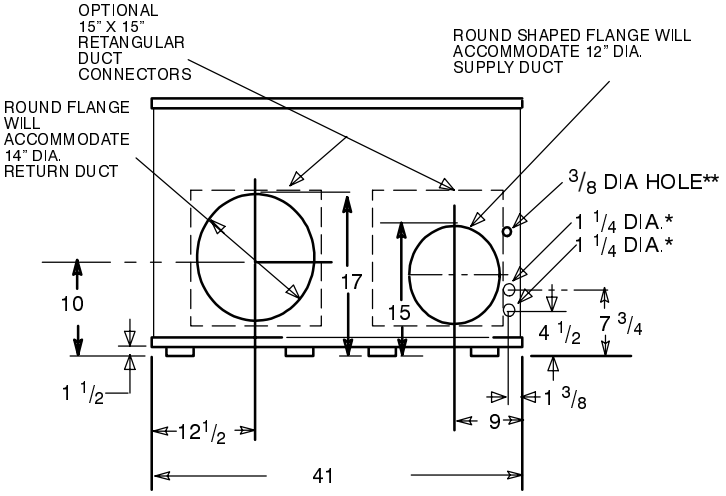

* ELECTRICAL ACCESS FOR LINE VOLTAGE POWER SUPPLY-ONE FOR UNIT, ONE FOR HEATER
** FOR LOW VOLTAGE WIRING

SPECIFICATIONS SUBJECT TO CHANGE WITHOUT NOTICE

NOTES