25HBS3
Base™ Series 13 Heat Pump
1–1/2 To 5 Nominal Tons
(Sizes 18 – 60)

Carrier®
Turn to the Experts.℠

Product Data

INDUSTRY LEADING FEATURES / BENEFITS

Efficiency

- 13 SEER/ 11 EER / Up to 8.6 HSPF (Nominal)
- Microtube Technology™ refrigeration system
- Indoor air quality accessories available

Sound

- Sound level as low as 74 dBA
- Sound levels as low as 72 dBA with accessory sound blanket

Comfort

- System supports Thermidistat™ or standard thermostat controls

Reliability

- Scroll compressor
- Filter drier
- Loss of charge switch
- Balanced refrigeration system for maximum reliability

Durability

WeatherArmor™ protection package:

- Solid, Durable sheet metal construction
- Wire coil guard
- Baked-on powder paint

Applications

- Long-line - up to 250 feet (76.20 m) total equivalent length, up to 200 feet (60.96 m) condenser above evaporator, or up to 60 ft. (18.29 m) evaporator above condenser (See Longline Guide for more information.)
- Low ambient (down to -20°F/-28.9°C) with accessory kit

MODEL NUMBER NOMENCLATURE

1	2	3	4	5	6	7	8	9	10	11	12	13
N	N	A	A	A/N	N	N	N	A/N	A/N	A/N	N	N
2	**5**	**H**	**B**	**S**	**3**	**3**	**6**	**A**	**0**	**0**	**3**	0
Product Series		Product Family	Tier	Major Series	SEER	Cooling Capacity		Grille Variations	Open	Open	Voltage	Series
25 = HP		H = RES HP	B=Base	S = R–22	3=13 SEER			A = Standard G = Dense Coil Guard	0=Not Defined	0=Not Defined	3=208/230–1 5=208/230–3 6=460/3	0 = Original Series

ARI PERFORMANCE CERTIFIED
ARI Standard 210/240 Unitary Heat Pumps

ISO 9001:2000 QMI REGISTERED

ASHRAE 90.1 COMPLIANT

c UL US

ENERGY STAR PARTNER

This product has been designed and manufactured to meet Energy Star® criteria for energy efficiency when matched with appropriate coil components. However, proper refrigerant charge and proper air flow are critical to achieve rated capacity and efficiency. Installation of this product should follow all manufacturing refrigerant charging and air flow instructions. **Failure to confirm proper charge and air flow may reduce energy efficiency and shorten equipment life.**

STANDARD FEATURES

Feature	18	24	30	31	36	42	48	60
13 SEER	X	X	X	X	X	X	X	X
Scroll Compressor	X	X	X	X	X	X	X	X
Wire Coil Guard	X	X	X	X	X	X	X	X
Field Installed Filter Drier	X	X	X	X	X	X	X	X
Front Seating Service Valves	X	X	X	X	X	X	X	X
Internal Pressure Relief Valve	X	X	X	X	X	X	X	X
Internal Thermal Overload	X	X	X	X	X	X	X	X
Long Line capability	X	X	X	X	X	X	X	X
Low Ambient capability with Kit	X	X	X	X	X	X	X	X
Loss of Charge Switch	X	X	X	X	X	X	X	X

X = Standard

PHYSICAL DATA

UNIT SIZE – VOLTAGE, SERIES	18–30	24–30	30–30,50	31–30,50	36–30,50,60	42–30,50,60	48–30,50,60	60–31,51,61
Operating Weight lb (kg)	159 (72.12)	160 (72.58)	208 (94.35)	162 (73.48)	187 (84.82)	203 (92.08)	229 (103.87)	271 (12.92)
Shipping Weight lb (kg)	184 (83.46)	185 (83.92)	240 (108.86)	180 (81.65)	225 (102.06)	239 (119.75)	264 (119.75)	303 (137.44)
Compressor Type	Scroll							
REFRIGERANT	Freon® (R–22)							
Control	TXV (R–22 Hard Shutoff)							
Charge lb (kg)	5.4 (2.47)	6.0 (2.7)	7.3 (3.3)	6.0 (2.7)	7.7 (3.5)	9.6 (4.4)	11.8 (5.3)	14.5 (6.6)
Outdoor Heating Piston #	40	49	57	57	57	65	70	78
COND FAN	Propeller Type, Direct Drive							
Air Discharge	Vertical							
Air Qty (CFM)	2233	2614	2614	2614	3334	3810	4046	4046
Motor HP	1/12	1/10	1/10	1/10	1/8	1/5	1/4	1/4
Motor RPM	800	1100	1100	1100	800	800	800	800
COND COIL								
Face Area Sq ft (m)	15.09 (4.56)	15.09 (4.56)	25.87 (7.89)	15.09 (4.56)	20.12 (6.13)	25.15 (7.67)	17.60 (5.36)	20.12 (9.13)
Fins per In.	20	20	20	20	20	20	20	20
Rows	1	1	1	1	1	1	2	2
Circuits	5	6	6	5	6	7	8	9
VALVE CONNECT. (In. ID)								
Vapor	5/8	5/8	3/4	3/4	3/4	7/8	7/8	7/8
Liquid	3/8							
REFRIGERANT TUBES (In. OD)								
Rated Vapor*	5/8		3/4			7/8		1–1/8
Liquid	3/8							

*Units are rated with 25 ft (7.6 m) of lineset length. See *Vapor Line Sizing and Cooling Capacity Loss* table when using other sizes and lengths of lineset.

Note: See unit Installation Instruction for proper installation.

VAPOR LINE SIZING AND COOLING CAPACITY LOSS 1-STAGE HEAT PUMP APPLICATIONS

LONG LINE APPLICATION: An application is considered "Long line" when the total equivalent tubing length exceeds 80 ft. (24.38 m) or when there is more than 20 ft. (6.09 m) vertical separation between indoor and outdoor units. These applications require additional accessories and system modifications for reliable system operation. The maximum allowable total equivalent length is 250 ft. (76.2 m). The maximum vertical separation is 200 ft. (60.96 m) when outdoor unit is above indoor unit, and 60 ft. (18.3 m) when the outdoor unit is below the indoor unit. Refer to Accessory Usage Guideline below for required accessories. See Longline Application Guideline for required piping and system modifications. Also, refer to the table below for vapor tube diameters based on the total length to minimize the cooling capacity loss.

Unit Nominal Size (Btuh)	Maximum Liquid Line Diameters (In. OD)	Vapor Line Diameters (In.) OD	Cooling Capacity Loss (%) Total Equivalent Line Length ft. (m)								
			Standard Application		Long Line Application Requires Accessories						
			26–50 (7.9–15.2)	51–80 (15.5–24.4)	81–100 (24.7–30.5)	101–125 (30.8–38.1)	126–150 (38.4–45.7)	151–175 (46.0–50.3)	176–200 (53.6–60.0)	201–225 (61.3–68.6)	226–250 (68.9–76.2)
18,000 R–22 HP	3/8	5/8	0	1	1	2	3	3	4	5	5
		3/4	0	0	0	0	1	1	1	1	2
24,000 R–22 HP		5/8	0	1	3	3	5	6	7	8	9
		3/4	0	0	0	1	1	1	2	2	3
		7/8	0	0	0	0	0	0	0	1	1
30,000 R–22 HP		5/8	1	3	5	6	8	10	11	13	15
		3/4	0	1	1	2	3	3	4	5	5
		7/8	0	0	0	1	1	1	2	2	2
36,000 R–22 HP		3/4	0	1	2	3	4	5	6	7	8
		7/8	0	0	1	1	2	2	3	3	4
42,000 R–22 HP		3/4	1	2	3	4	5	7	8	9	10
		7/8	0	1	1	2	2	3	4	4	5
48,000 R–22 HP		3/4	1	2	4	5	7	8	10	11	13
		7/8	0	1	2	2	3	4	5	5	6
		1–1/8	0	0	0	0	0	1	1	1	1
60,000 R–22 HP		7/8	1	2	3	4	5	7	8	9	10
		1–1/8	0	0	1	1	1	2	2	2	3

Applications in this area are long line. Accessories are required as shown recommended on Long Line Application Guidelines

Applications in this area may have height restrictions that limit allowable total equivalent length, when outdoor unit is below indoor unit See Long Line Application Guidelines

ACCESSORY THERMOSTATS

THERMOSTAT / SUBBASE PKG.	DESCRIPTION
TP–PRH–01	Programmable Thermidistat
TP–NRH–01	Non–programmable Thermidistat
TB–PHP–01	Base Series Programmable HP Stat
TB–NHP–01	Base Series Non–programmable HP Stat
TSTATCCPRH01–B*	Thermidistat™ Control — Non–Programmable/Programmable Thermostat with Humidity Control (For use in Dual Fuel, AC, HP, and 2S applications. Includes Outdoor Air Temperature Sensor.)
TSTATCCPHH01–B*	HybridHeat™ (Dual Fuel) Thermostat — Auto Changeover, 7–Day Programmable, °F/°C, Includes Outdoor Sensor (TSTATXXSEN01–B)
TSTATCCPHP01–B	Thermostat — Auto Changeover, 7–Day Programmable, °F/°C, 2–Stage Heat, 1–Stage Cool
TSTATCCNHP01–C	Thermostat — Auto Changeover, Non–Programmable, °F/°C, 2–Stage Heat, 1–Stage Cool
TSTATCCSHP01	Standard Programmable Thermostat—Manual Changeover, 5–2 Day Programmable, °F/°C, 1–Stage Heat/ 1–Stage Cool
TSTATCCBHP01*–B	Builder's Thermostat — Heat Pump, Non–Programmable, °F/°C, 2–Stage Heat, 1–Stage Cool, Manual Changeover
TSTATXXSEN01–B**	Outdoor Air Temperature Sensor
TSTATXXNBP01	Backplate for Non–Programmable Thermostat
TSTATXXPBP01	Backplate for Programmable Thermostat and Thermidistat™ Control
TSTATXXSBP01	Backplate for Standard Programmable Thermostat
TSTATXXBBP01	Backplate for Builder's Thermostat
TSTATXXCNV10†	Thermostat Conversion Kit (4 to 5 Wire) — 10 Pack

* Do not use in zoning heat pump applications.

** Outdoor temperature sensor is an accessory for all Carrier electronic thermostats, except the non–programmable air conditioner version and builder;s thermostats. It allows the temperature at a remote location (outdoors) to be displayed on the thermostat. The outdoor air temperature sensor must be used with the HybridHeat™ (dual fuel) thermostat.

† Thermostat conversion kit is a 24–vac accessory that can turn a 4–wire thermostat application into a 5–wire application. This kit can also be used to replace a broken thermostat wire, or add an extra wire when needed.

The outdoor air temperature sensor is included with the Thermidistat Control and HybridHeat™ (dual fuel) thermostat.

ACCESSORIES

ORDER NUMBER	DESCRIPTION	18–30	24–30	30–30	30–50	31–30	31–50	36–30	36–50	36–60	42–30	42–50	42–60	48–30	48–50	48–60	60–30, 31	60–50, 51	60–60, 61
HC32GE229	BALL BEARING MOTOR	X																	
HC34GE240	BALL BEARING MOTOR		X	X	X	X	X												
HC36GE232	BALL BEARING MOTOR							X	X										
HC40GE228	BALL BEARING MOTOR										X	X		X	X		X	X	
HC36GE462	BALL BEARING MOTOR									X									
HC38GE462	BALL BEARING MOTOR												X						
HC40GE467	BALL BEARING MOTOR															X			X
KAACH1201AAA	CRANKCASE HTR																		
KAACH1301AAA	CRANKCASE HTR																		
KAACH1601AAA	CRANKCASE HTR			X		X		X											
KAACH1701AAA	CRANKCASE HTR	X	X																
STANDARD	CRANKCASE HTR				S		S		S	S	S	S	S	S	S	S	S	S	S
KSACY0101AAA	CYCLE PROTECTOR	X	X	X	X	X	X	X	X	X	X	X	X	X	X	X	X	X	X
KAAFT0101AAA	FREEZE THERMOSTAT	X	X	X	X	X	X	X	X	X	X	X	X	X	X	X	X	X	X
KSAHS1501AAA	HARD START	X	X	X		X		X			X			X					
KSAHS1601AAA	HARD START																X		
KSAHI0401R22	HIGH PRESS SW	X	X	X	X	X	X	X	X	X	X	X	X	X	X	X	X	X	X
KHAIR0101AAA	ISOLATION RELAY	X	X	X	X	X	X	X	X	X	X	X	X	X	X	X	X	X	X
KSALA0201R22	LOW AMBIENT	X	X	X	X	X	X	X	X	X	X	X	X	X	X	X	X	X	X
KSALA0601AAA	MOTORMASTER 230V	X	X	X	X	X	X	X	X		X	X		X	X		X	X	
KSALA0701AAA	MOTORMASTER 460V									X			X			X			X
KHAOT0201SEC	OUTDOOR TSTAT SECONDARY	X	X	X	X	X	X	X	X	X	X	X	X	X	X	X	X	X	X
KHAOT0301FST	OUTDOOR TSTAT	X	X	X	X	X	X	X	X	X	X	X	X	X	X	X	X	X	X
KHASS0606MPK*	SNOW STAND/RACK	X	X	X	X	X	X	X	X	X	X	X	X	X	X	X	X	X	X
KHALS0401LLS	SOLENOID VALVE	X	X	X	X	X	X	X	X	X	X	X	X	X	X	X	X	X	X
KSASH0601COP	SOUND BLKT			X	X	X	X	X	X	X	X	X	X	X	X	X			
KSASH1801COP	SOUND BLKT	X	X																
KSASH2101COP	SOUND BLKT																X	X	X
KAACS0201PTC	START ASSIST PTC	X	X	X		X		X			X			X			X		
KSASF0101AAA	SUPPORT FEET	X	X	X	X	X	X	X	X	X	X	X	X	X	X	X	X	X	X
KAATD0101TDR	TIME DELAY	X	X	X	X	X	X	X	X	X	X	X	X	X	X	X	X	X	X
KSATX0601HSO	TXV	X	X	X	X	X	X	X	X	X	X	X	X						
KSATX0701HSO	TXV													X	X	X			
KSATX1001HSO	TXV																X	X	X

*Available through RCD

X = Accessory

S = Standard

ACCESSORY USAGE GUIDELINE

Accessory	REQUIRED FOR LOW–AMBIENT COOLING APPLICATIONS (Below 55°F / 12.8°C)	REQUIRED FOR LONG LINE APPLICATIONS* (Over 80 ft. / 24.38 m)	REQUIRED FOR SEA COAST APPLICATIONS (Within 2 miles / 3.22 km)
Accumulator	Standard	Standard	Standard
Ball Bearing Fan Motor	Yes†	No	No
Compressor Start Assist Capacitor and Relay	Yes	Yes	No
Crankcase Heater	Yes	Yes	No
Evaporator Freeze Thermostat	Yes	No	No
Hard Shutoff TXV	Yes	Yes	Yes
Isolation Relay	Yes	No	No
Liquid Line Solenoid Valve	No	See Long–Line Application Guideline	No
Motor Master® Control or Low Ambient Pressure Switch	Yes	No	No
Support Feet	Recommended	No	Recommended

* For tubing line sets between 80 and 200 ft. (24.38 and 60.96 m) and/or 20 ft. (6.09 m) vertical differential, refer to Residential Split–System Longline Application Guideline.

† Additional requirement for Low–Ambient Controller (full modulation feature) MotorMaster® Control.

25HBS3

Accessory Description and Usage (Listed Alphabetically)

1. Ball-Bearing Fan Motor

A fan motor with ball bearings which permits speed reduction while maintaining bearing lubrication.

Usage Guideline:

Required on all units when MotorMaster® is used.

2. Compressor Start Assist - Capacitor and Relay

Start capacitor and relay gives a ”hard” boost to compressor motor at each start up.

Usage Guideline:

Required for reciprocating compressors in the following applications:

Long line

Low ambient cooling

Hard shut off expansion valve on indoor coil

Liquid line solenoid on indoor coil

Required for single-phase scroll compressors in the following applications:

Long line

Low ambient cooling

Suggested for all compressors in areas with a history of low voltage problems.

3. Compressor Start Assist — PTC Type

Solid state electrical device which gives a ”soft” boost to the compressor at each start-up.

Usage Guideline:

Suggested in installations with marginal power supply.

4. Crankcase Heater

An electric resistance heater which mounts to the base of the compressor to keep the lubricant warm during off cycles. Improves compressor lubrication on restart and minimizes the chance of liquid slugging.

Usage Guideline:

Required in low ambient cooling applications.

Required in long line applications.

Suggested in all commercial applications.

5. Cycle Protector

The cycle protector is designed to prevent compressor short cycling. This control provides an approximate 5-minute delay after power to the compressor has been interrupted for any reason, including power outage, protector control trip, thermostat jiggling, or normal cycling.

6. Evaporator Freeze Thermostat

An SPST temperature-actuated switch that stops unit operation when evaporator reaches freeze-up conditions.

Usage Guideline:

Required when low ambient kit has been added.

7. High Pressure Switch

A high pressure switch that protects unit against excessive pressure.

Usage Guideline:

Required in all heat pumps operated in dual fuel applications.

8. Isolation Relay

An SPDT relay which switches the low-ambient controller out of the outdoor fan motor circuit when the heat pump switches to heating mode.

Usage Guideline:

Required in all heat pumps where low ambient kit has been added.

9. Liquid-Line Solenoid Valve (LLS)

An electrically operated shutoff valve which stops and starts refrigerant liquid flow in response to compressor operation. It is to be installed at the outdoor unit to control refrigerant off cycle migration in the heating mode.

Usage Guideline:

An LLS is required in all long line heat pump applications to control refrigerant off cycle migration in the heating mode. See Long Line Guideline.

10. Low-Ambient Pressure Switch Kit

A long life pressure switch which is mounted to outdoor unit service valve. It is designed to cycle the outdoor fan motor in order to maintain head pressure within normal operating limits (approximately 100 psig to 225 psig). The control will maintain working head pressure at low-ambient temperatures down to 0°F (-18°C) when properly installed.

Usage Guideline:

A Low-Ambient Pressure Switch or MotorMaster® Low-Ambient Controller must be used when cooling operation is used at outdoor temperatures below 55°F (12.8°C).

11. MotorMaster® Low-Ambient Controller

A fan-speed control device activated by a temperature sensor, designed to control condenser fan motor speed in response to the saturated, condensing temperature during operation in cooling mode only. For outdoor temperatures down to -20°F (-28.9°C), it maintains condensing temperature at 100°F ±10°F (37.8°C ± 5.5°C).

Usage Guideline:

A MotorMaster® Low Ambient Controller or Low-Ambient Pressure Switch must be used when cooling operation is used at outdoor temperatures below 55°F (12.8°C).

Suggested for all commercial applications.

12. Outdoor Air Temperature Sensor

Designed for use with Carrier Thermostats listed in this publication. This device enables the thermostat to display the outdoor temperature. This device also is required to enable special thermostat features such as auxiliary heat lock out.

Usage Guideline:

Suggested for all Carrier thermostats listed in this publication.

13. Outdoor Thermostat

An SPDT temperature-actuated switch which turns on supplemental electric heaters when outdoor air temperature drops below a user-selected set point.

Usage Guideline:

Electric supplemental heat applications in non-variable speed indoor units when electric heat staging is desired.

Usage Guideline:

Some local codes may require limiting the heating head pressure in the vapor line in some applications.

14. Secondary Outdoor Thermostat

An SPDT temperature-actuated switch which turns on third-stage of supplemental electric heaters when outdoor air temperature drops below the second-stage set point.

Usage Guideline:

Outdoor thermostat applications where electric heater is capable of 3-stage operation.

15. Snow Stand

Coated wire rack which supports unit 18 in. (457.2 mm) above mounting pad to allow for drainage from unit base.

Usage Guideline:

Suggested in the following applications:

Heat pump installations in heavy snowfall areas.

Heat pump installations in snow drift locations.

Heat pump installations in areas of prolonged subfreezing temperatures.

All commercial installations.

16. Sound Hood

Wraparound sound reducing cover for the compressor. Reduces the sound level up to 2 dBA.

Usage Guideline:

Suggested when unit is installed closer than 15 ft (4.57 m) to quiet areas, bedrooms, etc.

Suggested when unit is installed between two houses less than 10 ft (3.05 m) apart.

Usage Guideline:

Suggested in the following applications:

Heat pump installations in heavy snowfall areas.

Heat pump installations in snowdrift locations.

Heat pump installations in areas of prolonged subfreezing temperatures.

All commercial installations.

17. Thermostatic Expansion Valve (TXV) Bi-Flow

A modulating flow-control valve which meters refrigerant liquid flow rate into the evaporator in response to the superheat of the refrigerant gas leaving the evaporator.

Usage Guideline:

Required in all heat pump applications

18. Time-Delay Relay

An SPST delay relay which briefly continues operation of indoor blower motor to provide additional cooling after the compressor cycles off.

Note: Most indoor unit controls include this feature. For those that do not, use the guideline below.

Usage Guideline:

Accessory required to meet ARI rating, where indoor not equipped.

ELECTRICAL DATA

UNIT SIZE	V/PH	OPER VOLTS*		COMPR		FAN	MCA	MIN WIRE SIZE†	MIN WIRE SIZE†	MAX LENGTH ft (m)‡	MAX LENGTH ft (m)‡	MAX FUSE** or CKT BRK AMPS
		MAX	MIN	LRA	RLA	FLA		60° C	75° C	60° C	75° C	
18–30	208/230/1	253	197	41	9.0	0.5	11.7	14	14	67 (20.,4)	64 (19.5)	20
24–30				54	11.3	0.75	14.8	14	14	53 (16.2)	51 (15.5)	25
30–30				72.5	14.8	0.75	19.2	12	12	65 (19.8)	62 (18.9)	30
31–30				72.5	13.5	0.75	17.6	14	14	45 (13.7)	43 (13.1)	30
36–30				88	16.0	0.9	20.9	12	12	60 (18.3)	57 (17.4)	30
42–30				104	20.2	1.2	26.5	10	10	75 (22.9)	72 (21.9)	40
48–30				137	21.2	1.2	27.6	10	10	72 (25.3)	69 (21.0)	40
60–31				148	25.0	1.2	32.5	8	8	96 (29.3)	91 (27.7)	50
30–50	208/230/3	253	197	63	10.4	0.75	13.75	14	14	66 (20.1)	63 (19.2)	20
31–50				63	9.0	0.75	12	14	14	76 (23.2)	72 (21.9)	20
36–50				77	10.7	0.9	14.3	14	14	64 (19.5)	60 (18.3)	20
42–50				88	12.8	1.2	17.2	14	14	53 (16.2)	50 (15.2)	25
48–50				91	13.8	1.2	18.4	14	14	49 (14.9)	47 (14.3)	30
60–51				123	17.3	1.2	22.8	12	12	63 (19.2)	60 (18.3)	40
36–60	460/3	506	414	39	5.1	0.5	6.9	14	14	264 (80.5)	251 (76.5)	15
42–60				44	6.1	0.5	8.1	14	14	225 (68.6)	214 (65.2)	15
48–60				46	7.1	0.6	9.4	14	14	193 (58.8)	184 (56.1)	15
60–61				49.5	6.7	0.6	10.4	14	14	175 (53.3)	166 (50.6)	20

* Permissible limits of the voltage range at which the unit will operate satisfactorily

† If wire is applied at ambient greater than 30° C, consult table 310–16 of the NEC (ANSI/NFPA 70). The ampacity of non–metallic–sheathed cable (NM), trade name ROMEX, shall be that of 60° C conditions, per the NEC (ANSI/NFPA 70) Article 336–26. If other than uncoated (no–plated), 60 or 75° C insulation, copper wire (solid wire for 10 AWG or smaller, stranded wire for larger than 10 AWG) is used, consult applicable tables of the NEC (ANSI/NFPA 70).

‡ Length shown is as measured 1 way along wire path between unit and service panel for voltage drop not to exceed 2%.

** Time–Delay fuse.

FLA – Full Load Amps

LRA – Locked Rotor Amps

MCA – Minimum Circuit Amps

RLA – Rated Load Amps

NOTE: Control circuit is 24–V on all units and requires external power source. Copper wire must be used from service disconnect to unit. All motors/compressors contain internal overload protection.

A-WEIGHTED SOUND POWER

UNIT SIZE– VOLTAGE, SERIES	STANDARD RATING (dBA)	TYPICAL OCTAVE BAND SPECTRUM (dBA, without tone adjustment)						
		125	250	500	1000	2000	4000	8000
18–30	75	52.0	59.5	64.5	71.0	67.0	61.5	54.5
24–30	76	52.5	63.5	69.5	72.0	67.5	64.5	59.5
30–30, 50	76	52.0	64.0	70.0	71.0	68.0	66.5	65.0
31–30, 50	75	53.0	63.5	68.5	71.0	68.0	64.5	59.5
36–30, 50, 60	74	52.0	62.0	65.0	70.0	66.5	64.0	59.5
42–30, 50, 60	76	53.5	63.0	67.5	72.5	68.5	65.0	63.0
48–30, 50, 60	76	56.5	64.5	68.5	71.5	68.0	64.5	59.0
60–31, 51, 61	76	57.5	62.0	69.5	70.5	68.0	64.0	57.5

NOTE: Tested in accordance with ARI Standard 270–95 (not listed in ARI).

A-WEIGHTED SOUND POWER WITH SOUND HOOD

UNIT SIZE– VOLTAGE, SERIES	STANDARD RATING (dBA)	TYPICAL OCTAVE BAND SPECTRUM (dBA. without tone adjustment)						
		125	250	500	1000	2000	4000	8000
18–30	72	52.0	59.5	64.0	68.0	64.0	60.0	52.5
24–30	75	53.5	63.0	69.0	70.5	66.5	64.0	58.5
30–30, 50	75	53.0	64.5	69.5	70.5	67.5	64.5	60.5
31–30, 50	74	53.0	64.0	68.5	70.0	67.0	63.0	57.5
36–30, 50, 60	72	53.5	61.5	64.5	68.0	64.0	60.0	54.5
42–30, 50, 60	75	54.0	62.5	67.0	70.5	66.0	63.5	58.5
48–30, 50, 60	75	57.0	65.0	68.5	70.5	66.5	63.0	55.5
60–31, 51, 61	73	57.0	62.5	67.5	68.5	66.5	60.5	53.5

NOTE: Tested in accordance with ARI Standard 270–95 (not listed in ARI).

CHARGING SUBCOOLING (TXV-TYPE EXPANSION DEVICE)

UNIT SIZE– VOLTAGE, SERIES	REQUIRED SUBCOOLING °F (°C)
18–30	9 (5)
24–30	11 (6.1)
30–30, 50	8 (4.4)
31–30, 50	10 (5.6))
36–30, 50, 60	11 (6.1)
42–30, 50, 60	11 (6.1)
48–30, 50, 60	12 (6.7)
60–31, 51, 61	11 (6.1)

DIMENSIONS - ENGLISH

UNIT	SERIES	ELECTRICAL CHARACTERISTICS				A	B	C	D	E	F	G	K	L	M	N	P	OPERATING WEIGHT (lbs)	SHIPPING WEIGHT (lbs)	SHIPPING DIMENSIONS (L x W x H)
25HBS318	0	X	O	O	O	31 3/16"	28 15/16"	3 3/4"	5/8"	6 9/16"	24 11/16"	9 1/8"	2 13/16"	1/2"	16 5/8"	14 3/8"	11 1/2"	159	184	32 3/8" X 35 1/2" X 32 9/16"
25HBS324	0	X	O	O	O	31 3/16"	28 15/16"	3 3/4"	5/8"	6 9/16"	24 11/16"	9 1/8"	2 13/16"	1/2"	16 1/2"	15 1/8"	13 5/8"	160	185	32 3/8" X 35 1/2" X 32 9/16"
25HBS330	0	X	O	X	O	31 3/16"	45 15/16"	3 3/4"	3/4"	6 9/16"	24 11/16"	9 1/8"	2 13/16"	1/2"	16 1/2"	15 1/2"	20 3/4"	208	240	32 3/8" X 35 1/2" X 49 9/16"
25HBS331	0	X	O	X	O	31 3/16"	28 15/16"	3 3/4"	3/4"	6 9/16"	24 11/16"	9 1/8"	2 13/16"	1/2"	14 1/4"	14 1/2"	12 1/4"	162	180	32 3/8" X 35 1/2" X 32 9/16"
25HBS336	0	X	O	X	X	35"	32 5/16"	3 3/4"	3/4"	6 9/16"	28 7/16"	9 1/8"	2 13/16"	1/2"	17"	16"	16"	187	225	36 1/8" X 39 5/16" X 35 15/16"
25HBS342	0	X	O	X	X	35"	39 1/8"	3 7/8"	7/8"	6 9/16"	28 7/16"	9 1/8"	2 15/16"	5/8"	16 1/2"	16"	17"	203	239	36 1/8" X 39 5/16" X 42 3/4"
25HBS348	0	X	O	X	X	35"	28 15/16"	3 7/8"	7/8"	6 9/16"	28 7/16"	9 1/8"	2 15/16"	5/8"	18 1/2"	18"	17 1/2"	229	264	36 1/8" X 39 5/16" X 32 9/16"
25HBS360	1	X	O	X	X	35"	32 5/16"	3 7/8"	7/8"	6 9/16"	28 7/16"	9 1/8"	2 15/16"	5/8"	16"	13"	13 1/2"	271	303	36 1/8" X 39 5/16" X 35 15/16"
		208-230-1-60	230-1-60	208/230-3-60	460-3-60															

X = YES
O = NO

NOTES:

1. ALLOW 30" CLEARANCE TO SERVICE SIDE OF UNIT, 48" ABOVE UNIT, 6" ON ONE SIDE, 12" ON REMAINING SIDE, AND 24" BETWEEN UNITS FOR PROPER AIRFLOW.
2. MINIMUM OUTDOOR OPERATING AMBIENT IN COOLING MODE IS 55°F, MAX. 125°F.
3. SERIES DESIGNATION IS THE 10TH POSITION OF THE UNIT MODEL NUMBER.
4. CENTER OF GRAVITY ⊕.
5. ALL DIMENSIONS ARE IN "INCHES" UNLESS NOTED.

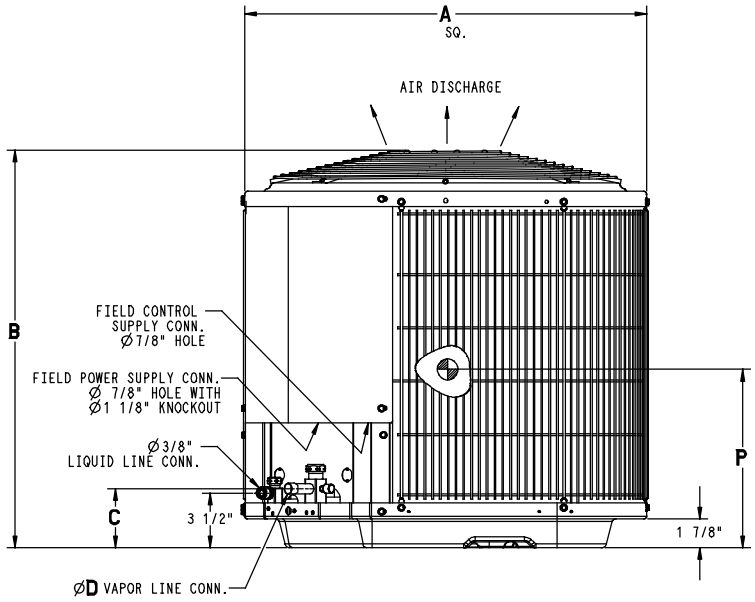

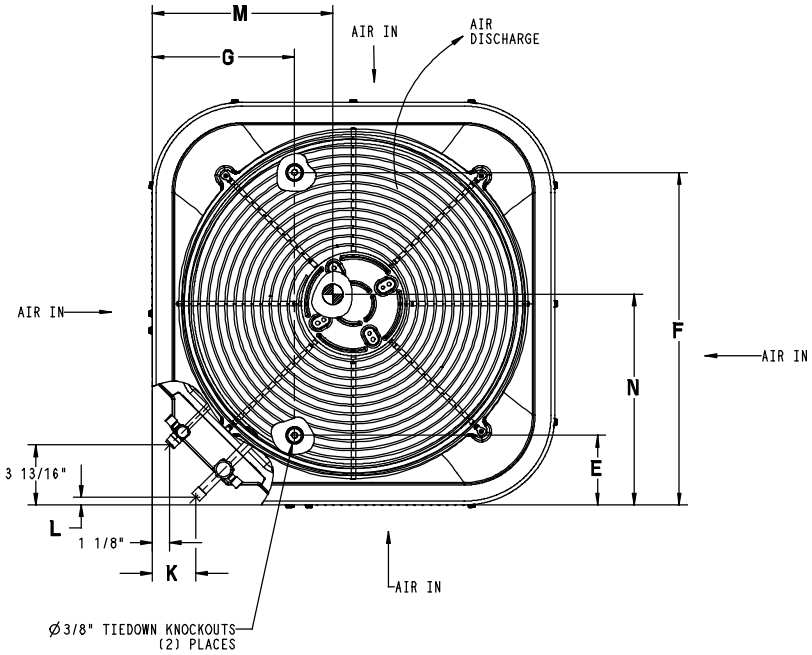

UNIT SIZE	MINIMUM MOUNTING PAD DIMENSIONS
-	26" X 26"
18,24,30,31	31 1/2" X 31 1/2"
36,42,48,60	35" X 35"

DIMENSIONS - SI

UNIT	SERIES	ELECTRICAL CHARACTERISTICS				A	B	C	D	E	F	G	K	L	M	N	P	OPERATING WEIGHT (Kgs)	SHIPPING WEIGHT (Kgs)	SHIPPING DIMENSIONS (L x W x H)
25HBS318	0	X	O	O	O	792.2	735.0	95.2	15.9	166.7	627.1	231.8	71.4	12.7	422.3	365.1	292.1	72.1	83.5	822.3 X 901.7 X 827.1
25HBS324	0	X	O	O	O	792.2	735.0	95.2	15.9	166.7	627.1	231.8	71.4	12.7	419.1	384.2	346.1	72.6	83.9	822.3 X 901.7 X 827.1
25HBS330	0	X	O	X	O	792.2	1166.8	95.2	19.0	166.7	627.1	231.8	71.4	12.7	419.1	393.7	527.0	94.3	108.9	822.3 X 901.7 X 1258.9
25HBS331	0	X	O	X	O	792.2	735.0	95.2	19.0	166.7	627.1	231.8	71.4	12.7	362.0	368.3	311.2	73.5	81.6	822.3 X 901.7 X 827.1
25HBS336	0	X	O	X	X	889.0	820.8	95.2	19.0	166.7	722.3	231.8	71.4	12.7	431.8	406.4	406.4	84.8	102.1	917.6 X 998.6 X 912.8
25HBS342	0	X	O	X	X	889.0	993.8	98.4	22.2	166.7	722.3	231.8	74.6	15.9	419.1	406.4	431.8	92.1	108.4	917.6 X 998.6 X 1085.8
25HBS348	0	X	O	X	X	889.0	735.0	98.4	22.2	166.7	722.3	231.8	74.6	15.9	469.9	457.2	444.5	103.9	119.7	917.6 X 998.6 X 827.1
25HBS360	1	X	O	X	X	889.0	820.8	98.4	22.2	166.7	722.3	231.8	74.6	15.9	406.4	330.2	342.9	122.9	137.4	917.6 X 998.6 X 912.8
		208-230-1-60	230-1-60	208/230-3-60	460-3-60															

X = YES
O = NO

NOTES:

1. ALLOW 762.0 CLEARANCE TO SERVICE SIDE OF UNIT, 1219.2 ABOVE UNIT, 152.4 ON ONE SIDE, 304.8 ON REMAINING SIDE, AND 609.6 BETWEEN UNITS FOR PROPER AIRFLOW.
2. MINIMUM OUTDOOR OPERATING AMBIENT IN COOLING MODE IS 13°C, MAX. 52°C.
3. SERIES DESIGNATION IS THE 10TH POSITION OF THE UNIT MODEL NUMBER.
4. CENTER OF GRAVITY ⊕.
5. ALL DIMENSIONS ARE IN "MM" UNLESS NOTED.

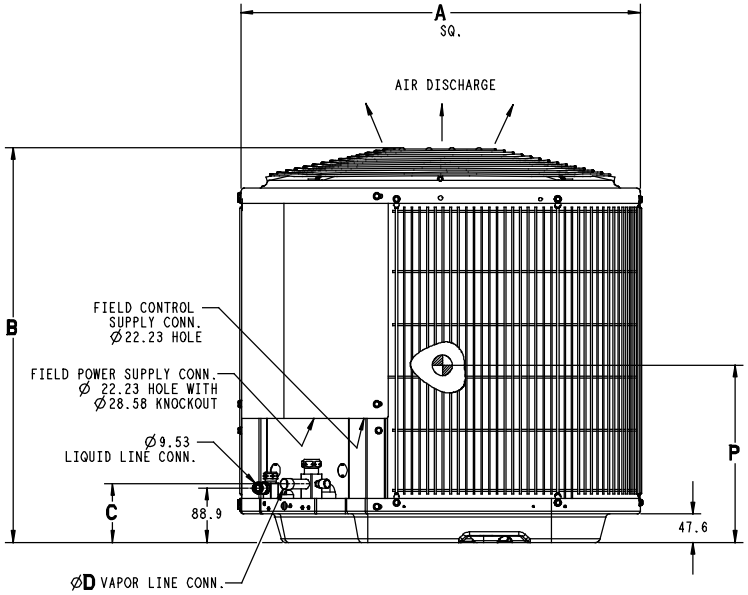

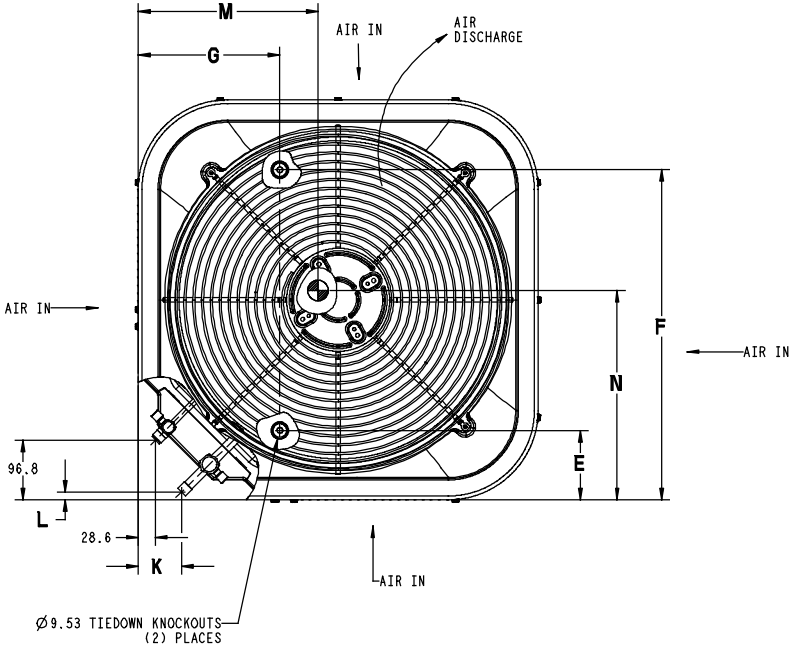

UNIT SIZE	MINIMUM MOUNTING PAD DIMENSIONS
-	660.4 X 660.4
18,24,30,31	800.1 X 800.1
36,42,48,60	889.0 X 889.0

25HBS3 BALANCE POINT WORKSHEET

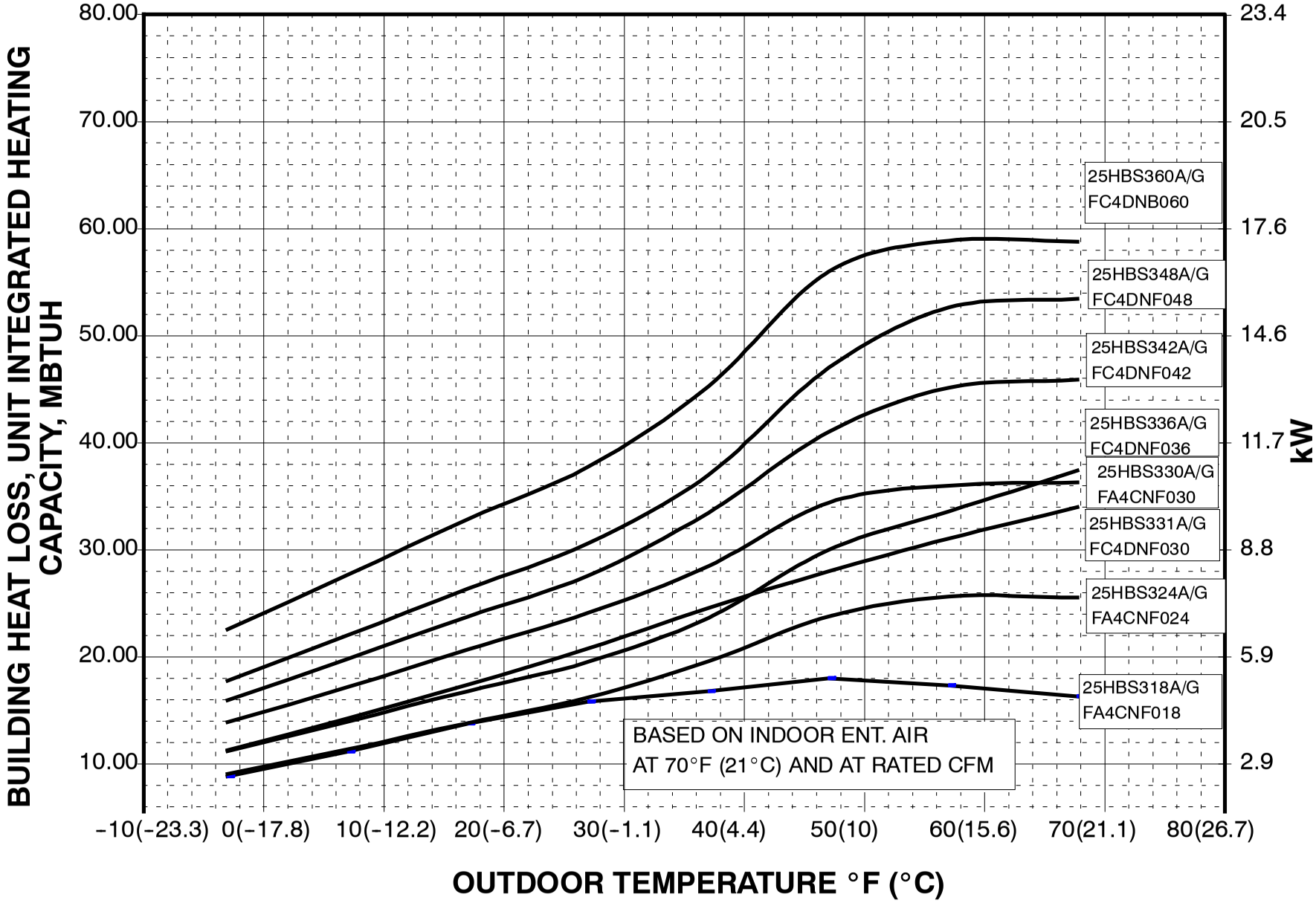

CLEARANCES

Clearances (various examples)

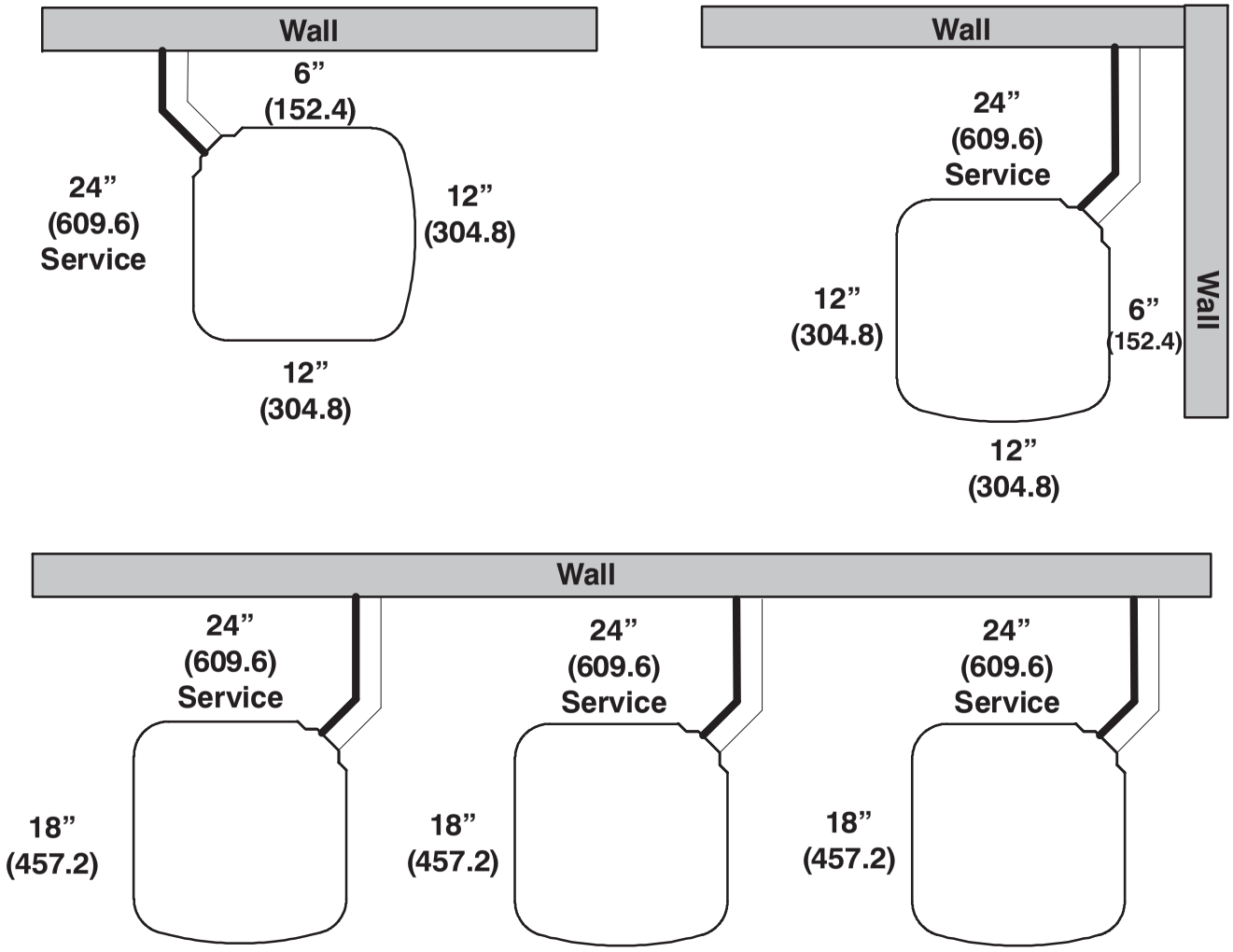

Note: Numbers in ( ) = mm

A07832

COMBINATION RATINGS

ARI Ref. No.	Model Number	Coil Model Number	Furnace Model Number	Cooling Capacity	EER	SEER	High Temp		HSPF	Low Temp	
							E Capacity	E COP		H Capacity	H COP
3029041	25HBS318(A,G)30	†FA4CN(F,C)018		17100	10.8	13.00	18000	3.52	8.0	10500	2.34
3029071	25HBS318(A,G)30	FA4CN(F,C)024		17200	10.8	13.00	16000	3.30	7.9	10500	2.34
3029072	25HBS318(A,G)30	FC4DNF018		17500	11.7	14.00	17500	3.80	8.5	10100	2.52
3029073	25HBS318(A,G)30	FC4DNF024		17600	12.0	14.00	15400	3.60	8.5	10000	2.56
3029074	25HBS318(A,G)30	FF1ENE018		17100	10.8	13.00	18000	3.54	8.0	10500	2.36
3029075	25HBS318(A,G)30	FF1ENE024		17300	10.8	13.00	15600	3.32	8.0	10500	2.38
3029076	25HBS318(A,G)30	FK4DNF001		17500	12.0	14.00	14600	3.48	8.4	9900	2.54
3029077	25HBS318(A,G)30	FK4DNF002		17700	12.5	14.00	14600	3.58	8.6	9900	2.58
3029045	25HBS318(A,G)30	CAR**1814A**	58CV(A,X)070–12	16900	11.7	14.00	18000	3.70	8.2	9800	2.46
3029042	25HBS318(A,G)30	CAR**1814A**	58PH*045–08	17100	12.0	14.50	18000	3.70	8.2	10000	2.50
3029044	25HBS318(A,G)30	CAR**1814A**+TDR		16900	10.8	13.00	18100	3.46	7.9	10400	2.34
3029047	25HBS318(A,G)30	CAR**2414A**	58CV(A,X)070–12	17300	12.0	14.00	15600	3.70	8.4	9900	2.50
3029046	25HBS318(A,G)30	CAR**2414A**+TDR		17400	10.8	13.00	15700	3.34	8.1	10500	2.40
3029050	25HBS318(A,G)30	CAR**2417A**	58CV(A,X)090–16	17400	12.0	14.00	15600	3.70	8.6	9900	2.52
3111250	25HBS318(A,G)30	CAR**2417A**	58MEB040–12	18000	13.0	15.00	13900	3.62	8.2	10100	2.64
3111251	25HBS318(A,G)30	CAR**2417A**	58MEB060–12	17800	13.0	15.00	14400	3.66	8.2	10000	2.62
3029049	25HBS318(A,G)30	CAR**2417A**	58MV(B,C)060–14	17300	12.0	14.00	15600	3.70	8.4	9900	2.52
3029048	25HBS318(A,G)30	CAR**2417A**+TDR		17400	10.8	13.00	15700	3.34	8.1	10500	2.40
3029064	25HBS318(A,G)30	CNRF*2418A**+TDR		17400	10.8	13.00	15700	3.44	8.2	10500	2.40
3029062	25HBS318(A,G)30	CNRH*2417A**	58CV(A,X)070–12	17400	12.0	14.00	15600	3.84	8.5	9900	2.52
3029063	25HBS318(A,G)30	CNRH*2417A**	58CV(A,X)090–16	17400	12.0	14.00	15600	3.84	8.5	9900	2.54
3111254	25HBS318(A,G)30	CNRH*2417A**	58MEB040–12	17900	13.0	15.00	14900	3.78	8.2	10000	2.62
3111255	25HBS318(A,G)30	CNRH*2417A**	58MEB060–12	17600	13.0	15.00	15600	3.84	8.2	9900	2.58
3029059	25HBS318(A,G)30	CNRH*2417A**	58MV(B,C)040–14	17300	12.0	14.00	15600	3.84	8.5	9900	2.52
3029060	25HBS318(A,G)30	CNRH*2417A**	58MV(B,C)060–14	17300	12.0	14.00	15600	3.84	8.5	9900	2.52
3029061	25HBS318(A,G)30	CNRH*2417A**	58MV(B,C)080–14	17400	12.0	14.00	15600	3.82	8.5	9900	2.52
3029058	25HBS318(A,G)30	CNRH*2417A**+TDR		17400	10.8	13.00	15700	3.44	8.2	10500	2.40
3029052	25HBS318(A,G)30	CNRV*1814A**	58CV(A,X)070–12	16900	12.0	14.00	17100	3.88	8.5	9900	2.50
3029043	25HBS318(A,G)30	CNRV*1814A**	58PH*045–08	17400	12.0	14.50	17800	3.84	8.4	10000	2.52
3029051	25HBS318(A,G)30	CNRV*1814A**+TDR		16900	10.8	13.00	17200	3.52	8.1	10500	2.40
3029054	25HBS318(A,G)30	CNRV*2414A**	58CV(A,X)070–12	17300	12.0	14.00	15600	3.84	8.5	9900	2.52
3029053	25HBS318(A,G)30	CNRV*2414A**+TDR		17400	10.8	13.00	15700	3.44	8.2	10500	2.40
3029057	25HBS318(A,G)30	CNRV*2417A**	58CV(A,X)090–16	17400	12.0	14.00	15600	3.84	8.5	9900	2.54
3111252	25HBS318(A,G)30	CNRV*2417A**	58MEB040–12	17900	13.0	15.00	14900	3.78	8.2	10000	2.62
3111253	25HBS318(A,G)30	CNRV*2417A**	58MEB060–12	17600	13.0	15.00	15600	3.84	8.2	9900	2.58
3029056	25HBS318(A,G)30	CNRV*2417A**	58MV(B,C)060–14	17300	12.0	14.00	15600	3.84	8.5	9900	2.52
3029055	25HBS318(A,G)30	CNRV*2417A**+TDR		17400	10.8	13.00	15700	3.44	8.2	10500	2.40
3029069	25HBS318(A,G)30	CSRH*2412A**	58CV(A,X)070–12	17300	12.0	14.00	14800	3.62	8.5	9900	2.52
3029070	25HBS318(A,G)30	CSRH*2412A**	58CV(A,X)090–16	17400	12.0	14.00	14800	3.62	8.5	9900	2.52
3111256	25HBS318(A,G)30	CSRH*2412A**	58MEB040–12	17900	13.0	15.00	13700	3.58	8.2	10000	2.60
3111257	25HBS318(A,G)30	CSRH*2412A**	58MEB060–12	17600	13.0	15.00	14500	3.64	8.2	9900	2.54
3029066	25HBS318(A,G)30	CSRH*2412A**	58MV(B,C)040–14	17300	12.0	14.00	14800	3.62	8.5	9900	2.52
3029067	25HBS318(A,G)30	CSRH*2412A**	58MV(B,C)060–14	17300	12.0	14.00	14800	3.62	8.5	9900	2.52
3029068	25HBS318(A,G)30	CSRH*2412A**	58MV(B,C)080–14	17400	12.0	14.00	14800	3.60	8.5	9900	2.52
3029065	25HBS318(A,G)30	CSRH*2412A**+TDR		17400	10.8	13.00	14800	3.26	8.0	10500	2.42
3089003	25HBS324(A,G)30	FA4CN(F,C)024		22600	10.8	13.00	23800	3.52	7.9	14400	2.36
3029151	25HBS324(A,G)30	FA4CN(F,C)030		22800	10.8	13.00	22600	3.46	7.9	14300	2.40
3029152	25HBS324(A,G)30	FC4DNF024		23000	11.5	14.00	23400	3.70	8.3	13900	2.50
3029153	25HBS324(A,G)30	FC4DNF030		23200	11.5	14.00	22200	3.66	8.4	13800	2.54
3029154	25HBS324(A,G)30	FF1ENE030		22600	10.8	13.00	23600	3.50	8.0	14400	2.36
3029157	25HBS324(A,G)30	FK4DN(B,F)003		23200	11.7	14.00	20800	3.58	8.5	13600	2.56
3029155	25HBS324(A,G)30	FK4DNF001		23000	11.7	14.00	22600	3.64	8.3	13600	2.50
3029156	25HBS324(A,G)30	FK4DNF002		23200	11.7	14.00	22600	3.76	8.5	13700	2.54
3029083	25HBS324(A,G)30	CAR**2414A**	58CV(A,X)070–12	22800	11.5	14.00	23800	3.70	8.3	13600	2.48
3029079	25HBS324(A,G)30	CAR**2414A**	58PH*045–08	22800	11.5	14.25	22800	3.68	8.2	13800	2.48
3029082	25HBS324(A,G)30	CAR**2414A**+TDR		22800	10.8	13.00	23800	3.56	8.1	14400	2.38
3029086	25HBS324(A,G)30	CAR**2417A**	58CV(A,X)090–16	22800	11.7	14.00	23600	3.74	8.4	13600	2.50
3111258	25HBS324(A,G)30	CAR**2417A**	58MEB040–12	23200	12.0	14.50	23400	3.82	8.4	13800	2.54
3111259	25HBS324(A,G)30	CAR**2417A**	58MEB060–12	23200	12.0	14.50	23200	3.84	8.5	13800	2.56
3111260	25HBS324(A,G)30	CAR**2417A**	58MEB080–12	23200	12.0	14.50	23400	3.82	8.4	13800	2.54
3029085	25HBS324(A,G)30	CAR**2417A**	58MV(B,C)060–14	22800	11.5	14.00	23600	3.72	8.3	13600	2.50
3029084	25HBS324(A,G)30	CAR**2417A**+TDR		22800	10.8	13.00	23800	3.54	8.1	14400	2.38
3029088	25HBS324(A,G)30	CAR**3014A**	58CV(A,X)070–12	22800	11.5	14.00	22000	3.58	8.2	13600	2.50
3029087	25HBS324(A,G)30	CAR**3014A**+TDR		22800	10.8	13.00	20800	3.28	7.8	14400	2.40
3029091	25HBS324(A,G)30	CAR**3017A**	58CV(A,X)090–16	23000	11.7	14.00	20800	3.60	8.3	13600	2.52
3111261	25HBS324(A,G)30	CAR**3017A**	58MEB040–12	23400	12.0	14.50	20000	3.56	8.2	13800	2.58
3111262	25HBS324(A,G)30	CAR**3017A**	58MEB060–12	23400	12.0	14.50	19800	3.56	8.2	13900	2.58
3111263	25HBS324(A,G)30	CAR**3017A**	58MEB080–12	22400	12.0	14.50	20200	3.58	8.2	13800	2.56
3029090	25HBS324(A,G)30	CAR**3017A**	58MV(B,C)060–14	22800	11.7	14.00	20800	3.60	8.3	13600	2.50
3029089	25HBS324(A,G)30	CAR**3017A**+TDR		22800	10.8	13.00	20800	3.28	7.8	14400	2.40
3029126	25HBS324(A,G)30	CNRF*2418A**+TDR		22800	10.8	13.00	23800	3.64	8.2	14400	2.40
3029109	25HBS324(A,G)30	CNRH*2417A**	58CV(A,X)070–12	22600	11.5	14.00	23600	3.80	8.4	13700	2.48
3029110	25HBS324(A,G)30	CNRH*2417A**	58CV(A,X)090–16	22800	11.5	14.00	23600	3.84	8.5	13600	2.52
3029111	25HBS324(A,G)30	CNRH*2417A**	58CV(A,X)110–20	22800	11.5	14.00	23600	3.82	8.4	13700	2.50
3029112	25HBS324(A,G)30	CNRH*2417A**	58CV(A,X)135–22	22800	11.5	14.00	23600	3.82	8.5	13700	2.50
3029113	25HBS324(A,G)30	CNRH*2417A**	58CV(A,X)155–22	22800	11.5	14.00	23600	3.82	8.5	13700	2.50
3111270	25HBS324(A,G)30	CNRH*2417A**	58MEB040–12	23000	12.0	14.00	23800	3.90	8.5	13800	2.52
3111271	25HBS324(A,G)30	CNRH*2417A**	58MEB060–12	23000	12.0	14.00	23800	3.90	8.5	13800	2.54
3111272	25HBS324(A,G)30	CNRH*2417A**	58MEB080–12	23000	12.0	14.00	23800	3.88	8.5	13800	2.52
3029103	25HBS324(A,G)30	CNRH*2417A**	58MV(B,C)040–14	22800	11.5	14.00	23600	3.80	8.4	13700	2.50
3029104	25HBS324(A,G)30	CNRH*2417A**	58MV(B,C)060–14	22800	11.5	14.00	23600	3.82	8.4	13700	2.50
3029105	25HBS324(A,G)30	CNRH*2417A**	58MV(B,C)080–14	22800	11.5	14.00	23600	3.82	8.4	13700	2.50
3029106	25HBS324(A,G)30	CNRH*2417A**	58MV(B,C)080–20	22800	11.5	14.00	23600	3.82	8.4	13700	2.50
3029107	25HBS324(A,G)30	CNRH*2417A**	58MV(B,C)100–20	22800	11.5	14.00	23600	3.82	8.4	13700	2.50
3029108	25HBS324(A,G)30	CNRH*2417A**	58MV(B,C)120–20	22600	11.5	14.00	23600	3.80	8.4	13700	2.48
3029081	25HBS324(A,G)30	CNRH*2417A**	58PH*045–08	22800	11.5	14.25	23200	3.76	8.4	13800	2.48

See notes on page 31

COMBINATION RATINGS CONTINUED

ARI Ref. No.	Model Number	Coil Model Number	Furnace Model Number	Cooling Capacity	EER	SEER	High Temp		HSPF	Low Temp	
							E Capacity	E COP		H Capacity	H COP
3029102	25HBS324(A,G)30	CNRH*2417A**+TDR		22800	10.8	13.00	23800	3.64	8.2	14400	2.40
3029121	25HBS324(A,G)30	CNRH*3017A**	58CV(A,X)070−12	22800	11.7	14.00	20600	3.58	8.2	13600	2.50
3029122	25HBS324(A,G)30	CNRH*3017A**	58CV(A,X)090−16	23000	11.7	14.00	20600	3.60	8.4	13600	2.52
3029123	25HBS324(A,G)30	CNRH*3017A**	58CV(A,X)110−20	23000	11.7	14.00	20600	3.60	8.4	13600	2.52
3029124	25HBS324(A,G)30	CNRH*3017A**	58CV(A,X)135−22	23000	11.7	14.00	20600	3.60	8.4	13600	2.52
3029125	25HBS324(A,G)30	CNRH*3017A**	58CV(A,X)155−22	23000	11.7	14.00	20600	3.60	8.4	13600	2.52
3111273	25HBS324(A,G)30	CNRH*3017A**	58MEB040−12	23400	12.0	14.50	20200	3.56	8.3	13800	2.58
3111274	25HBS324(A,G)30	CNRH*3017A**	58MEB060−12	23400	12.0	14.50	19800	3.54	8.2	13900	2.58
3111275	25HBS324(A,G)30	CNRH*3017A**	58MEB080−12	23400	12.0	14.50	19800	3.56	8.2	13800	2.56
3029115	25HBS324(A,G)30	CNRH*3017A**	58MV(B,C)040−14	22800	11.7	14.00	20600	3.58	8.3	13600	2.52
3029116	25HBS324(A,G)30	CNRH*3017A**	58MV(B,C)060−14	22800	11.7	14.00	20600	3.60	8.3	13600	2.52
3029117	25HBS324(A,G)30	CNRH*3017A**	58MV(B,C)080−14	22800	11.7	14.00	20600	3.58	8.3	13600	2.52
3029118	25HBS324(A,G)30	CNRH*3017A**	58MV(B,C)080−20	22800	11.7	14.00	20600	3.60	8.3	13600	2.52
3029119	25HBS324(A,G)30	CNRH*3017A**	58MV(B,C)100−20	22800	11.7	14.00	20600	3.60	8.4	13600	2.52
3029120	25HBS324(A,G)30	CNRH*3017A**	58MV(B,C)120−20	22800	11.7	14.00	20600	3.58	8.2	13600	2.50
3029114	25HBS324(A,G)30	CNRH*3017A**+TDR		22800	10.8	13.00	20600	3.28	7.8	14400	2.40
3029093	25HBS324(A,G)30	CNRV*2414A**	58CV(A,X)070−12	22600	11.5	14.00	23800	3.80	8.4	13700	2.48
3029080	25HBS324(A,G)30	CNRV*2414A**	58PH*045−08	22800	11.5	14.25	23200	3.76	8.4	13800	2.48
3029092	25HBS324(A,G)30	CNRV*2414A**+TDR		22800	10.8	13.00	23800	3.64	8.2	14400	2.40
3029096	25HBS324(A,G)30	CNRV*2417A**	58CV(A,X)090−16	22800	11.5	14.00	23600	3.84	8.5	13600	2.52
3111264	25HBS324(A,G)30	CNRV*2417A**	58MEB040−12	23000	12.0	14.00	23800	3.90	8.5	13800	2.52
3111265	25HBS324(A,G)30	CNRV*2417A**	58MEB060−12	23000	12.0	14.00	23800	3.90	8.5	13800	2.54
3111266	25HBS324(A,G)30	CNRV*2417A**	58MEB080−12	23000	12.0	14.00	23800	3.88	8.5	13800	2.52
3029095	25HBS324(A,G)30	CNRV*2417A**	58MV(B,C)060−14	22800	11.5	14.00	23600	3.82	8.4	13700	2.50
3029094	25HBS324(A,G)30	CNRV*2417A**+TDR		22800	10.8	13.00	23800	3.64	8.2	14400	2.40
3029098	25HBS324(A,G)30	CNRV*3014A**	58CV(A,X)070−12	22800	11.5	14.00	20600	3.58	8.2	13600	2.50
3029097	25HBS324(A,G)30	CNRV*3014A**+TDR		22800	10.8	13.00	20600	3.28	7.8	14400	2.40
3029101	25HBS324(A,G)30	CNRV*3017A**	58CV(A,X)090−16	23000	11.7	14.00	20600	3.60	8.4	13600	2.52
3111267	25HBS324(A,G)30	CNRV*3017A**	58MEB040−12	23400	12.0	14.50	19800	3.56	8.2	13800	2.58
3111268	25HBS324(A,G)30	CNRV*3017A**	58MEB060−12	23400	12.0	14.50	19800	3.54	8.2	13900	2.58
3111269	25HBS324(A,G)30	CNRV*3017A**	58MEB080−12	23400	12.0	14.50	20200	3.56	8.2	13800	2.56
3029100	25HBS324(A,G)30	CNRV*3017A**	58MV(B,C)060−14	22800	11.7	14.00	20600	3.60	8.3	13600	2.52
3029099	25HBS324(A,G)30	CNRV*3017A**+TDR		22800	10.8	13.00	20600	3.28	7.8	14400	2.40
3029134	25HBS324(A,G)30	CSRH*2412A**	58CV(A,X)070−12	22800	11.5	14.00	23000	3.72	8.4	13700	2.50
3029135	25HBS324(A,G)30	CSRH*2412A**	58CV(A,X)090−16	22800	11.7	14.00	23000	3.76	8.4	13700	2.52
3029136	25HBS324(A,G)30	CSRH*2412A**	58CV(A,X)110−20	22800	11.5	14.00	23000	3.74	8.4	13700	2.50
3029137	25HBS324(A,G)30	CSRH*2412A**	58CV(A,X)135−22	22800	11.5	14.00	23000	3.74	8.4	13700	2.50
3029138	25HBS324(A,G)30	CSRH*2412A**	58CV(A,X)155−22	22800	11.7	14.00	23000	3.74	8.4	13700	2.50
3111276	25HBS324(A,G)30	CSRH*2412A**	58MEB040−12	23400	12.0	14.50	23000	3.80	8.4	13800	2.52
3111277	25HBS324(A,G)30	CSRH*2412A**	58MEB060−12	23400	12.0	14.50	22800	3.80	8.4	13800	2.54
3111278	25HBS324(A,G)30	CSRH*2412A**	58MEB080−12	23000	12.0	14.50	23000	3.78	8.4	13800	2.52
3029128	25HBS324(A,G)30	CSRH*2412A**	58MV(B,C)040−14	22800	11.5	14.00	23000	3.72	8.4	13700	2.50
3029129	25HBS324(A,G)30	CSRH*2412A**	58MV(B,C)060−14	22800	11.5	14.00	23000	3.74	8.4	13700	2.50
3029130	25HBS324(A,G)30	CSRH*2412A**	58MV(B,C)080−14	22800	11.5	14.00	23000	3.74	8.4	13700	2.50
3029131	25HBS324(A,G)30	CSRH*2412A**	58MV(B,C)080−20	22800	11.5	14.00	23000	3.74	8.4	13700	2.50
3029132	25HBS324(A,G)30	CSRH*2412A**	58MV(B,C)100−20	22800	11.5	14.00	23000	3.74	8.4	13700	2.50
3029133	25HBS324(A,G)30	CSRH*2412A**	58MV(B,C)120−20	22800	11.5	14.00	23000	3.72	8.3	13700	2.48
3029127	25HBS324(A,G)30	CSRH*2412A**+TDR		22800	10.8	13.00	23000	3.56	8.2	14400	2.42
3029146	25HBS324(A,G)30	CSRH*3012A**	58CV(A,X)070−12	22800	11.7	14.00	20200	3.56	8.3	13600	2.50
3029147	25HBS324(A,G)30	CSRH*3012A**	58CV(A,X)090−16	22800	11.7	14.00	20200	3.58	8.3	13600	2.52
3029148	25HBS324(A,G)30	CSRH*3012A**	58CV(A,X)110−20	22800	11.7	14.00	20200	3.56	8.3	13700	2.50
3029149	25HBS324(A,G)30	CSRH*3012A**	58CV(A,X)135−22	22800	11.7	14.00	20200	3.56	8.3	13600	2.52
3029150	25HBS324(A,G)30	CSRH*3012A**	58CV(A,X)155−22	22800	11.7	14.00	20200	3.58	8.3	13600	2.52
3111279	25HBS324(A,G)30	CSRH*3012A**	58MEB040−12	23400	12.0	14.50	19800	3.54	8.2	13800	2.56
3111280	25HBS324(A,G)30	CSRH*3012A**	58MEB060−12	23400	12.0	14.50	19600	3.52	8.2	13800	2.56
3111281	25HBS324(A,G)30	CSRH*3012A**	58MEB080−12	23400	12.0	14.50	20000	3.54	8.2	13800	2.54
3029140	25HBS324(A,G)30	CSRH*3012A**	58MV(B,C)040−14	22800	11.7	14.00	20200	3.56	8.3	13700	2.50
3029141	25HBS324(A,G)30	CSRH*3012A**	58MV(B,C)060−14	22800	11.7	14.00	20200	3.56	8.3	13600	2.50
3029142	25HBS324(A,G)30	CSRH*3012A**	58MV(B,C)080−14	22800	11.7	14.00	20200	3.56	8.3	13700	2.50
3029143	25HBS324(A,G)30	CSRH*3012A**	58MV(B,C)080−20	22800	11.7	14.00	20200	3.56	8.3	13600	2.50
3029144	25HBS324(A,G)30	CSRH*3012A**	58MV(B,C)100−20	22800	11.7	14.00	20200	3.56	8.3	13700	2.52
3029145	25HBS324(A,G)30	CSRH*3012A**	58MV(B,C)120−20	22800	11.7	14.00	20200	3.56	8.3	13600	2.50
3029139	25HBS324(A,G)30	CSRH*3012A**+TDR		22800	10.8	13.00	20200	3.24	7.8	14400	2.40
3029158	25HBS330(A,G)30	†FA4CN(F,C)030		28400	10.8	13.00	30000	3.46	8.1	18700	2.42
3029174	25HBS330(A,G)30	CAR**3014A**	58CV(A,X)070−12	28400	11.2	13.50	29200	3.52	8.2	18100	2.50
3029173	25HBS330(A,G)30	CAR**3014A**+TDR		28600	10.5	13.00	29600	3.44	8.1	18900	2.44
3029177	25HBS330(A,G)30	CAR**3017A**	58CV(A,X)090−16	28400	11.5	14.00	29200	3.54	8.2	17900	2.52
3111282	25HBS330(A,G)30	CAR**3017A**	58MEB040−12	28800	11.6	14.00	29200	3.62	8.3	18100	2.56
3111283	25HBS330(A,G)30	CAR**3017A**	58MEB060−12	28800	11.6	14.00	29200	3.62	8.3	18100	2.56
3111284	25HBS330(A,G)30	CAR**3017A**	58MEB080−12	28800	11.6	14.00	29200	3.60	8.3	18100	2.54
3111285	25HBS330(A,G)30	CAR**3017A**	58MEB080−16	29000	11.6	14.00	29200	3.62	8.3	18200	2.56
3029176	25HBS330(A,G)30	CAR**3017A**	58MV(B,C)060−14	28400	11.5	14.00	29200	3.52	8.2	18000	2.50
3029159	25HBS330(A,G)30	CAR**3017A**	58PH*070−16	28600	11.5	13.50	29400	3.56	8.2	18200	2.50
3029175	25HBS330(A,G)30	CAR**3017A**+TDR		28600	10.5	13.00	29600	3.44	8.1	18900	2.44
3029179	25HBS330(A,G)30	CAR**3614A**	58CV(A,X)070−12	28400	11.5	14.00	29200	3.54	8.2	18100	2.50
3029178	25HBS330(A,G)30	CAR**3614A**+TDR		28400	10.5	13.00	29400	3.44	8.1	18900	2.44
3029182	25HBS330(A,G)30	CAR**3617A**	58CV(A,X)090−16	28600	11.5	14.00	29000	3.58	8.3	17900	2.52
3111286	25HBS330(A,G)30	CAR**3617A**	58MEB040−12	29000	11.7	14.00	29000	3.64	8.4	18100	2.56
3111287	25HBS330(A,G)30	CAR**3617A**	58MEB060−12	29000	11.7	14.00	29000	3.64	8.4	18200	2.56
3111288	25HBS330(A,G)30	CAR**3617A**	58MEB080−12	28800	11.7	14.00	29000	3.64	8.3	18100	2.56
3111289	25HBS330(A,G)30	CAR**3617A**	58MEB080−16	29000	11.6	14.00	29000	3.64	8.4	18200	2.56
3029181	25HBS330(A,G)30	CAR**3617A**	58MV(B,C)060−14	28400	11.5	14.00	29000	3.54	8.3	18000	2.52
3029160	25HBS330(A,G)30	CAR**3617A**	58PH*070−16	28800	11.5	14.00	29200	3.58	8.2	18200	2.52
3029180	25HBS330(A,G)30	CAR**3617A**+TDR		28600	10.5	13.00	29400	3.44	8.1	18900	2.44
3029187	25HBS330(A,G)30	CAR**3621A**	58CV(A,X)110−20	28600	11.5	14.00	29000	3.60	8.3	18000	2.54
3029184	25HBS330(A,G)30	CAR**3621A**	58MV(B,C)080−14	28600	11.5	14.00	29000	3.58	8.3	18000	2.52

See notes on page 31

COMBINATION RATINGS CONTINUED

ARI Ref. No.	Model Number	Coil Model Number	Furnace Model Number	Cooling Capacity	EER	SEER	High Temp		HSPF	Low Temp	
							E Capacity	E COP		H Capacity	H COP
3029185	25HBS330(A,G)30	CAR**3621A**	58MV(B,C)080−20	28600	11.5	14.00	29000	3.56	8.3	18000	2.52
3029186	25HBS330(A,G)30	CAR**3621A**	58MV(B,C)100−20	28600	11.5	14.00	29000	3.58	8.3	18000	2.52
3029161	25HBS330(A,G)30	CAR**3621A**	58PH*090−16	29000	11.5	14.25	29000	3.64	8.5	18200	2.56
3029183	25HBS330(A,G)30	CAR**3621A**+TDR		28600	10.5	13.00	29400	3.44	8.1	18900	2.44
3029225	25HBS330(A,G)30	CNRF*3618A**+TDR		28600	10.5	13.00	29600	3.46	8.1	18900	2.44
3029208	25HBS330(A,G)30	CNRH*3017A**	58CV(A,X)070−12	28400	11.5	14.00	29200	3.52	8.2	18100	2.50
3029209	25HBS330(A,G)30	CNRH*3017A**	58CV(A,X)090−16	28400	11.5	14.00	29200	3.56	8.3	18000	2.52
3029210	25HBS330(A,G)30	CNRH*3017A**	58CV(A,X)110−20	28600	11.5	14.00	29200	3.56	8.3	18000	2.52
3029211	25HBS330(A,G)30	CNRH*3017A**	58CV(A,X)135−22	28600	11.5	14.00	29200	3.56	8.3	18000	2.52
3029212	25HBS330(A,G)30	CNRH*3017A**	58CV(A,X)155−22	28600	11.5	14.00	29200	3.58	8.3	18000	2.54
3111298	25HBS330(A,G)30	CNRH*3017A**	58MEB040−12	28800	11.6	14.00	29200	3.62	8.3	18100	2.56
3111299	25HBS330(A,G)30	CNRH*3017A**	58MEB060−12	28800	11.6	14.00	29200	3.62	8.3	18100	2.54
3111300	25HBS330(A,G)30	CNRH*3017A**	58MEB080−12	28800	11.6	14.00	29200	3.62	8.3	18100	2.54
3111301	25HBS330(A,G)30	CNRH*3017A**	58MEB080−16	29000	11.5	14.00	29200	3.62	8.3	18200	2.56
3029202	25HBS330(A,G)30	CNRH*3017A**	58MV(B,C)040−14	28400	11.5	14.00	29200	3.52	8.2	18100	2.50
3029203	25HBS330(A,G)30	CNRH*3017A**	58MV(B,C)060−14	28400	11.5	14.00	29200	3.54	8.2	18000	2.50
3029204	25HBS330(A,G)30	CNRH*3017A**	58MV(B,C)080−14	28400	11.5	14.00	29200	3.54	8.2	18100	2.50
3029205	25HBS330(A,G)30	CNRH*3017A**	58MV(B,C)080−20	28400	11.5	14.00	29200	3.54	8.2	18000	2.50
3029206	25HBS330(A,G)30	CNRH*3017A**	58MV(B,C)100−20	28400	11.5	14.00	29200	3.54	8.3	18000	2.52
3029207	25HBS330(A,G)30	CNRH*3017A**	58MV(B,C)120−20	28400	11.5	14.00	29200	3.54	8.2	18000	2.50
3029165	25HBS330(A,G)30	CNRH*3017A**	58PH*070−16	28600	11.5	13.75	29400	3.56	8.2	18200	2.50
3029166	25HBS330(A,G)30	CNRH*3017A**	58PH*090−16	28600	11.5	14.00	29200	3.58	8.2	18100	2.52
3029201	25HBS330(A,G)30	CNRH*3017A**+TDR		28600	10.5	13.00	29600	3.44	8.1	18900	2.44
3029220	25HBS330(A,G)30	CNRH*3617A**	58CV(A,X)070−12	28400	11.5	14.00	29000	3.52	8.2	18100	2.50
3029221	25HBS330(A,G)30	CNRH*3617A**	58CV(A,X)090−16	28400	11.5	14.00	29000	3.56	8.3	18000	2.52
3029222	25HBS330(A,G)30	CNRH*3617A**	58CV(A,X)110−20	28600	11.5	14.00	29000	3.56	8.3	18000	2.52
3029223	25HBS330(A,G)30	CNRH*3617A**	58CV(A,X)135−22	28600	11.5	14.00	29000	3.56	8.3	18000	2.52
3029224	25HBS330(A,G)30	CNRH*3617A**	58CV(A,X)155−22	28600	11.5	14.00	29000	3.58	8.3	18000	2.54
3111302	25HBS330(A,G)30	CNRH*3617A**	58MEB040−12	28800	11.6	14.00	29200	3.62	8.3	18100	2.56
3111303	25HBS330(A,G)30	CNRH*3617A**	58MEB060−12	28800	11.6	14.00	29200	3.62	8.3	18100	2.54
3111304	25HBS330(A,G)30	CNRH*3617A**	58MEB080−12	28800	11.6	14.00	29200	3.62	8.3	18100	2.54
3111305	25HBS330(A,G)30	CNRH*3617A**	58MEB080−16	29000	11.5	14.00	29200	3.62	8.3	18200	2.56
3029214	25HBS330(A,G)30	CNRH*3617A**	58MV(B,C)040−14	28400	11.5	14.00	29000	3.52	8.2	18100	2.50
3029215	25HBS330(A,G)30	CNRH*3617A**	58MV(B,C)060−14	28400	11.5	14.00	29000	3.54	8.2	18000	2.50
3029216	25HBS330(A,G)30	CNRH*3617A**	58MV(B,C)080−14	28400	11.5	14.00	29000	3.54	8.2	18100	2.50
3029217	25HBS330(A,G)30	CNRH*3617A**	58MV(B,C)080−20	28400	11.5	14.00	29000	3.54	8.2	18000	2.50
3029218	25HBS330(A,G)30	CNRH*3617A**	58MV(B,C)100−20	28400	11.5	14.00	29000	3.54	8.3	18000	2.52
3029219	25HBS330(A,G)30	CNRH*3617A**	58MV(B,C)120−20	28400	11.5	14.00	29000	3.54	8.2	18000	2.50
3029167	25HBS330(A,G)30	CNRH*3617A**	58PH*070−16	28600	11.5	13.75	29400	3.56	8.2	18200	2.50
3029168	25HBS330(A,G)30	CNRH*3617A**	58PH*090−16	28600	11.5	14.00	29200	3.58	8.2	18100	2.52
3029213	25HBS330(A,G)30	CNRH*3617A**+TDR		28600	10.5	13.00	29400	3.44	8.1	18900	2.44
3029189	25HBS330(A,G)30	CNRV*3014A**	58CV(A,X)070−12	28400	11.2	13.50	29200	3.52	8.2	18100	2.48
3029188	25HBS330(A,G)30	CNRV*3014A**+TDR		28600	10.5	13.00	29600	3.44	8.1	18900	2.44
3029192	25HBS330(A,G)30	CNRV*3017A**	58CV(A,X)090−16	28400	11.5	14.00	29200	3.56	8.3	18000	2.52
3111290	25HBS330(A,G)30	CNRV*3017A**	58MEB040−12	28800	11.6	14.00	29200	3.62	8.3	18100	2.56
3111291	25HBS330(A,G)30	CNRV*3017A**	58MEB060−12	28800	11.6	14.00	29200	3.62	8.3	18100	2.54
3111292	25HBS330(A,G)30	CNRV*3017A**	58MEB080−12	28800	11.6	14.00	29200	3.62	8.3	18100	2.54
3111293	25HBS330(A,G)30	CNRV*3017A**	58MEB080−16	29000	11.5	14.00	29200	3.62	8.3	18200	2.56
3029191	25HBS330(A,G)30	CNRV*3017A**	58MV(B,C)060−14	28400	11.5	14.00	29200	3.52	8.2	18000	2.50
3029162	25HBS330(A,G)30	CNRV*3017A**	58PH*070−16	28600	11.5	13.50	29400	3.56	8.2	18200	2.50
3029190	25HBS330(A,G)30	CNRV*3017A**+TDR		28600	10.5	13.00	29600	3.44	8.1	18900	2.44
3029195	25HBS330(A,G)30	CNRV*3617A**	58CV(A,X)090−16	28400	11.5	14.00	29000	3.56	8.3	18000	2.52
3111294	25HBS330(A,G)30	CNRV*3617A**	58MEB040−12	28800	11.6	14.00	29200	3.62	8.3	18100	2.56
3111295	25HBS330(A,G)30	CNRV*3617A**	58MEB060−12	28800	11.6	14.00	29200	3.62	8.3	18100	2.54
3111296	25HBS330(A,G)30	CNRV*3617A**	58MEB080−12	28800	11.6	14.00	29200	3.62	8.3	18100	2.54
3111297	25HBS330(A,G)30	CNRV*3617A**	58MEB080−16	29000	11.5	14.00	29200	3.62	8.3	18200	2.56
3029194	25HBS330(A,G)30	CNRV*3617A**	58MV(B,C)060−14	28400	11.5	14.00	29000	3.52	8.2	18000	2.50
3029163	25HBS330(A,G)30	CNRV*3617A**	58PH*070−16	28600	11.5	13.50	29400	3.56	8.2	18200	2.50
3029193	25HBS330(A,G)30	CNRV*3617A**+TDR		28600	10.5	13.00	29400	3.46	8.1	18900	2.44
3029200	25HBS330(A,G)30	CNRV*3621A**	58CV(A,X)110−20	28600	11.5	14.00	29000	3.56	8.3	18000	2.52
3029197	25HBS330(A,G)30	CNRV*3621A**	58MV(B,C)080−14	28400	11.5	14.00	29000	3.54	8.2	18100	2.50
3029198	25HBS330(A,G)30	CNRV*3621A**	58MV(B,C)080−20	28400	11.5	14.00	29000	3.54	8.2	18000	2.50
3029199	25HBS330(A,G)30	CNRV*3621A**	58MV(B,C)100−20	28400	11.5	14.00	29000	3.54	8.3	18000	2.52
3029164	25HBS330(A,G)30	CNRV*3621A**	58PH*090−16	28600	11.5	14.00	29200	3.58	8.2	18100	2.52
3029196	25HBS330(A,G)30	CNRV*3621A**+TDR		28600	10.5	13.00	29400	3.46	8.1	18900	2.44
3029233	25HBS330(A,G)30	CSRH*3012A**	58CV(A,X)070−12	28400	11.5	14.00	29200	3.54	8.2	18100	2.50
3029234	25HBS330(A,G)30	CSRH*3012A**	58CV(A,X)090−16	28400	11.5	14.00	29200	3.56	8.3	18000	2.52
3029235	25HBS330(A,G)30	CSRH*3012A**	58CV(A,X)110−20	28400	11.5	14.00	29200	3.56	8.3	18100	2.52
3029236	25HBS330(A,G)30	CSRH*3012A**	58CV(A,X)135−22	28600	11.5	14.00	29200	3.58	8.3	18000	2.52
3029237	25HBS330(A,G)30	CSRH*3012A**	58CV(A,X)155−22	28600	11.5	14.00	29200	3.58	8.3	18000	2.52
3111306	25HBS330(A,G)30	CSRH*3012A**	58MEB040−12	28800	11.6	14.00	29200	3.62	8.3	18100	2.54
3111307	25HBS330(A,G)30	CSRH*3012A**	58MEB060−12	29000	11.6	14.00	29200	3.62	8.3	18100	2.54
3111308	25HBS330(A,G)30	CSRH*3012A**	58MEB080−12	28800	11.6	14.00	29200	3.60	8.3	18100	2.54
3111309	25HBS330(A,G)30	CSRH*3012A**	58MEB080−16	29000	11.5	14.00	29200	3.62	8.3	18200	2.54
3029227	25HBS330(A,G)30	CSRH*3012A**	58MV(B,C)040−14	28400	11.5	14.00	29200	3.54	8.2	18100	2.50
3029228	25HBS330(A,G)30	CSRH*3012A**	58MV(B,C)060−14	28400	11.5	14.00	29200	3.54	8.2	18100	2.50
3029229	25HBS330(A,G)30	CSRH*3012A**	58MV(B,C)080−14	28400	11.5	14.00	29200	3.54	8.2	18100	2.50
3029230	25HBS330(A,G)30	CSRH*3012A**	58MV(B,C)080−20	28400	11.5	14.00	29200	3.54	8.3	18100	2.50
3029231	25HBS330(A,G)30	CSRH*3012A**	58MV(B,C)100−20	28400	11.5	14.00	29200	3.56	8.3	18100	2.52
3029232	25HBS330(A,G)30	CSRH*3012A**	58MV(B,C)120−20	28400	11.5	14.00	29200	3.54	8.2	18000	2.50
3029169	25HBS330(A,G)30	CSRH*3012A**	58PH*070−16	28600	11.5	13.75	29400	3.54	8.2	18200	2.50
3029170	25HBS330(A,G)30	CSRH*3012A**	58PH*090−16	28600	11.5	14.00	29200	3.56	8.2	18100	2.52
3029226	25HBS330(A,G)30	CSRH*3012A**+TDR		28800	10.5	13.00	29600	3.46	8.1	18900	2.44
3029245	25HBS330(A,G)30	CSRH*3612A**	58CV(A,X)070−12	28600	11.5	14.00	28800	3.62	8.4	18100	2.54
3029246	25HBS330(A,G)30	CSRH*3612A**	58CV(A,X)090−16	28600	11.7	14.00	28800	3.64	8.5	18000	2.56
3029247	25HBS330(A,G)30	CSRH*3612A**	58CV(A,X)110−20	28600	11.7	14.00	28600	3.66	8.5	18100	2.56
3029248	25HBS330(A,G)30	CSRH*3612A**	58CV(A,X)135−22	28600	11.7	14.00	28600	3.66	8.5	18000	2.58

See notes on page 31

COMBINATION RATINGS CONTINUED

ARI Ref. No.	Model Number	Coil Model Number	Furnace Model Number	Cooling Capacity	EER	SEER	High Temp		HSPF	Low Temp	
							E Capacity	E COP		H Capacity	H COP
3029249	25HBS330(A,G)30	CSRH*3612A**	58CV(A,X)155–22	28600	11.7	14.00	28600	3.66	8.5	18000	2.58
3111310	25HBS330(A,G)30	CSRH*3612A**	58MEB040–12	29600	12.0	14.00	28400	3.70	8.2	18200	2.60
3111311	25HBS330(A,G)30	CSRH*3612A**	58MEB060–12	28800	12.0	14.00	28400	3.70	8.2	18200	2.60
3111312	25HBS330(A,G)30	CSRH*3612A**	58MEB080–12	28600	12.0	14.00	28400	3.70	8.2	18200	2.60
3111313	25HBS330(A,G)30	CSRH*3612A**	58MEB080–16	29800	12.0	14.00	28200	3.70	8.2	18300	2.60
3029239	25HBS330(A,G)30	CSRH*3612A**	58MV(B,C)040–14	28600	11.5	14.00	28800	3.62	8.4	18100	2.54
3029240	25HBS330(A,G)30	CSRH*3612A**	58MV(B,C)060–14	28600	11.7	14.00	28800	3.62	8.4	18100	2.54
3029241	25HBS330(A,G)30	CSRH*3612A**	58MV(B,C)080–14	28600	11.7	14.00	28800	3.62	8.4	18100	2.56
3029242	25HBS330(A,G)30	CSRH*3612A**	58MV(B,C)080–20	28600	11.7	14.00	28800	3.62	8.4	18100	2.56
3029243	25HBS330(A,G)30	CSRH*3612A**	58MV(B,C)100–20	28600	11.7	14.00	28800	3.64	8.5	18100	2.56
3029244	25HBS330(A,G)30	CSRH*3612A**	58MV(B,C)120–20	28600	11.7	14.00	28800	3.64	8.4	18000	2.56
3029171	25HBS330(A,G)30	CSRH*3612A**	58PH*070–16	29400	11.5	14.25	28800	3.62	8.5	18300	2.56
3029172	25HBS330(A,G)30	CSRH*3612A**	58PH*090–16	29400	12.0	14.50	28800	3.68	8.6	18200	2.58
3029238	25HBS330(A,G)30	CSRH*3612A**+TDR		28400	10.8	13.00	29000	3.50	8.3	19000	2.48
3029251	25HBS330(A,G)30	FC4DN(F,B)036		28800	11.2	13.50	29200	3.56	8.2	18300	2.48
3029250	25HBS330(A,G)30	FC4DNF030		28600	11.2	13.50	29800	3.60	8.3	18100	2.50
3029252	25HBS330(A,G)30	FF1ENE030		28200	10.5	13.00	30000	3.44	8.0	18700	2.42
3029253	25HBS330(A,G)30	FF1ENE036		28800	10.8	13.00	29400	3.44	8.1	18800	2.44
3029256	25HBS330(A,G)30	FK4DN(B,F)003		28800	11.7	14.00	29000	3.60	8.4	17900	2.56
3029257	25HBS330(A,G)30	FK4DN(B,F)005		29800	12.0	14.00	25000	3.46	8.5	18000	2.64
3029254	25HBS330(A,G)30	FK4DNF001		28400	11.2	13.50	29600	3.50	8.1	18100	2.48
3029255	25HBS330(A,G)30	FK4DNF002		28600	11.5	14.00	29800	3.66	8.4	18100	2.54
3029258	25HBS330(A,G)50	†FA4CN(F,C)030		28400	10.8	13.00	30000	3.46	8.1	18700	2.42
3029351	25HBS330(A,G)50	FC4DN(F,B)036		28800	11.2	13.50	29200	3.56	8.2	18300	2.48
3029350	25HBS330(A,G)50	FC4DNF030		28600	11.2	13.50	29800	3.60	8.3	18100	2.50
3029352	25HBS330(A,G)50	FF1ENE030		28200	10.5	13.00	30000	3.44	8.0	18700	2.42
3029353	25HBS330(A,G)50	FF1ENE036		28800	10.8	13.00	29400	3.44	8.1	18800	2.44
3029356	25HBS330(A,G)50	FK4DN(B,F)003		28800	11.7	14.00	29000	3.60	8.4	17900	2.56
3029357	25HBS330(A,G)50	FK4DN(B,F)005		29800	12.0	14.00	25000	3.46	8.5	18000	2.64
3029354	25HBS330(A,G)50	FK4DNF001		28400	11.2	13.50	29600	3.50	8.1	18100	2.48
3029355	25HBS330(A,G)50	FK4DNF002		28600	11.5	14.00	29800	3.66	8.4	18100	2.54
3029274	25HBS330(A,G)50	CAR**3014A**	58CV(A,X)070–12	28400	11.2	13.50	29200	3.52	8.2	18100	2.50
3029273	25HBS330(A,G)50	CAR**3014A**+TDR		28600	10.5	13.00	29600	3.44	8.1	18900	2.44
3029277	25HBS330(A,G)50	CAR**3017A**	58CV(A,X)090–16	28400	11.5	14.00	29200	3.54	8.2	17900	2.52
3123111	25HBS330(A,G)50	CAR**3017A**	58MEB040–12	28800	11.6	14.00	29200	3.62	8.3	18100	2.56
3123112	25HBS330(A,G)50	CAR**3017A**	58MEB060–12	28800	11.6	14.00	29200	3.62	8.3	18100	2.56
3123113	25HBS330(A,G)50	CAR**3017A**	58MEB080–12	28800	11.6	14.00	29200	3.60	8.3	18100	2.54
3123114	25HBS330(A,G)50	CAR**3017A**	58MEB080–16	29000	11.6	14.00	29200	3.62	8.3	18200	2.56
3029276	25HBS330(A,G)50	CAR**3017A**	58MV(B,C)060–14	28400	11.5	14.00	29200	3.52	8.2	18000	2.50
3029259	25HBS330(A,G)50	CAR**3017A**	58PH*070–16	28600	11.5	13.50	29400	3.56	8.2	18200	2.50
3029275	25HBS330(A,G)50	CAR**3017A**+TDR		28600	10.5	13.00	29600	3.44	8.1	18900	2.44
3029279	25HBS330(A,G)50	CAR**3614A**	58CV(A,X)070–12	28400	11.5	14.00	29200	3.54	8.2	18100	2.50
3029278	25HBS330(A,G)50	CAR**3614A**+TDR		28400	10.5	13.00	29400	3.44	8.1	18900	2.44
3029282	25HBS330(A,G)50	CAR**3617A**	58CV(A,X)090–16	28600	11.5	14.00	29000	3.58	8.3	17900	2.52
3123115	25HBS330(A,G)50	CAR**3617A**	58MEB040–12	29000	11.7	14.00	29000	3.64	8.4	18100	2.56
3123116	25HBS330(A,G)50	CAR**3617A**	58MEB060–12	29000	11.7	14.00	29000	3.64	8.4	18200	2.56
3123117	25HBS330(A,G)50	CAR**3617A**	58MEB080–12	28800	11.7	14.00	29000	3.64	8.3	18100	2.56
3123118	25HBS330(A,G)50	CAR**3617A**	58MEB080–16	29000	11.6	14.00	29000	3.64	8.4	18200	2.56
3029281	25HBS330(A,G)50	CAR**3617A**	58MV(B,C)060–14	28400	11.5	14.00	29000	3.54	8.3	18000	2.52
3029260	25HBS330(A,G)50	CAR**3617A**	58PH*070–16	28800	11.5	14.00	29200	3.58	8.2	18200	2.52
3029280	25HBS330(A,G)50	CAR**3617A**+TDR		28600	10.5	13.00	29400	3.44	8.1	18900	2.44
3029287	25HBS330(A,G)50	CAR**3621A**	58CV(A,X)110–20	28600	11.5	14.00	29000	3.60	8.3	18000	2.54
3029284	25HBS330(A,G)50	CAR**3621A**	58MV(B,C)080–14	28600	11.5	14.00	29000	3.58	8.3	18000	2.52
3029285	25HBS330(A,G)50	CAR**3621A**	58MV(B,C)080–20	28600	11.5	14.00	29000	3.56	8.3	18000	2.52
3029286	25HBS330(A,G)50	CAR**3621A**	58MV(B,C)100–20	28600	11.5	14.00	29000	3.58	8.3	18000	2.52
3029261	25HBS330(A,G)50	CAR**3621A**	58PH*090–16	29000	11.5	14.25	29000	3.64	8.5	18200	2.56
3029283	25HBS330(A,G)50	CAR**3621A**+TDR		28600	10.5	13.00	29400	3.44	8.1	18900	2.44
3029325	25HBS330(A,G)50	CNRF*3618A**+TDR		28600	10.5	13.00	29600	3.46	8.1	18900	2.44
3029308	25HBS330(A,G)50	CNRH*3017A**	58CV(A,X)070–12	28400	11.5	14.00	29200	3.52	8.2	18100	2.50
3029309	25HBS330(A,G)50	CNRH*3017A**	58CV(A,X)090–16	28400	11.5	14.00	29200	3.56	8.3	18000	2.52
3029310	25HBS330(A,G)50	CNRH*3017A**	58CV(A,X)110–20	28600	11.5	14.00	29200	3.56	8.3	18000	2.52
3029311	25HBS330(A,G)50	CNRH*3017A**	58CV(A,X)135–22	28600	11.5	14.00	29200	3.56	8.3	18000	2.52
3029312	25HBS330(A,G)50	CNRH*3017A**	58CV(A,X)155–22	28600	11.5	14.00	29200	3.58	8.3	18000	2.54
3123127	25HBS330(A,G)50	CNRH*3017A**	58MEB040–12	28800	11.6	14.00	29200	3.62	8.3	18100	2.56
3123128	25HBS330(A,G)50	CNRH*3017A**	58MEB060–12	28800	11.6	14.00	29200	3.62	8.3	18100	2.54
3123129	25HBS330(A,G)50	CNRH*3017A**	58MEB080–12	28800	11.6	14.00	29200	3.62	8.3	18100	2.54
3123130	25HBS330(A,G)50	CNRH*3017A**	58MEB080–16	29000	11.5	14.00	29200	3.62	8.3	18200	2.56
3029302	25HBS330(A,G)50	CNRH*3017A**	58MV(B,C)040–14	28400	11.5	14.00	29200	3.52	8.2	18100	2.50
3029303	25HBS330(A,G)50	CNRH*3017A**	58MV(B,C)060–14	28400	11.5	14.00	29200	3.54	8.2	18000	2.50
3029304	25HBS330(A,G)50	CNRH*3017A**	58MV(B,C)080–14	28400	11.5	14.00	29200	3.54	8.2	18100	2.50
3029305	25HBS330(A,G)50	CNRH*3017A**	58MV(B,C)080–20	28400	11.5	14.00	29200	3.54	8.2	18000	2.50
3029306	25HBS330(A,G)50	CNRH*3017A**	58MV(B,C)100–20	28400	11.5	14.00	29200	3.54	8.3	18000	2.52
3029307	25HBS330(A,G)50	CNRH*3017A**	58MV(B,C)120–20	28400	11.5	14.00	29200	3.54	8.2	18000	2.50
3029265	25HBS330(A,G)50	CNRH*3017A**	58PH*070–16	28600	11.5	13.75	29400	3.56	8.2	18200	2.50
3029266	25HBS330(A,G)50	CNRH*3017A**	58PH*090–16	28600	11.5	14.00	29200	3.58	8.2	18100	2.52
3029301	25HBS330(A,G)50	CNRH*3017A**+TDR		28600	10.5	13.00	29600	3.44	8.1	18900	2.44
3029320	25HBS330(A,G)50	CNRH*3617A**	58CV(A,X)070–12	28400	11.5	14.00	29000	3.52	8.2	18100	2.50
3029321	25HBS330(A,G)50	CNRH*3617A**	58CV(A,X)090–16	28400	11.5	14.00	29000	3.56	8.3	18000	2.52
3029322	25HBS330(A,G)50	CNRH*3617A**	58CV(A,X)110–20	28600	11.5	14.00	29000	3.56	8.3	18000	2.52
3029323	25HBS330(A,G)50	CNRH*3617A**	58CV(A,X)135–22	28600	11.5	14.00	29000	3.56	8.3	18000	2.52
3029324	25HBS330(A,G)50	CNRH*3617A**	58CV(A,X)155–22	28600	11.5	14.00	29000	3.58	8.3	18000	2.54
3123131	25HBS330(A,G)50	CNRH*3617A**	58MEB040–12	28800	11.6	14.00	29200	3.62	8.3	18100	2.56
3123132	25HBS330(A,G)50	CNRH*3617A**	58MEB060–12	28800	11.6	14.00	29200	3.62	8.3	18100	2.54
3123133	25HBS330(A,G)50	CNRH*3617A**	58MEB080–12	28800	11.6	14.00	29200	3.62	8.3	18100	2.54
3123134	25HBS330(A,G)50	CNRH*3617A**	58MEB080–16	29000	11.5	14.00	29200	3.62	8.3	18200	2.56
3029314	25HBS330(A,G)50	CNRH*3617A**	58MV(B,C)040–14	28400	11.5	14.00	29000	3.52	8.2	18100	2.50

See notes on page 31

COMBINATION RATINGS CONTINUED

ARI Ref. No.	Model Number	Coil Model Number	Furnace Model Number	Cooling Capacity	EER	SEER	High Temp		HSPF	Low Temp	
							E Capacity	E COP		H Capacity	H COP
3029315	25HBS330(A,G)50	CNRH*3617A**	58MV(B,C)060−14	28400	11.5	14.00	29000	3.54	8.2	18000	2.50
3029316	25HBS330(A,G)50	CNRH*3617A**	58MV(B,C)080−14	28400	11.5	14.00	29000	3.54	8.2	18100	2.50
3029317	25HBS330(A,G)50	CNRH*3617A**	58MV(B,C)080−20	28400	11.5	14.00	29000	3.54	8.2	18000	2.50
3029318	25HBS330(A,G)50	CNRH*3617A**	58MV(B,C)100−20	28400	11.5	14.00	29000	3.54	8.3	18000	2.52
3029319	25HBS330(A,G)50	CNRH*3617A**	58MV(B,C)120−20	28400	11.5	14.00	29000	3.54	8.2	18000	2.50
3029267	25HBS330(A,G)50	CNRH*3617A**	58PH*070−16	28600	11.5	13.75	29400	3.56	8.2	18200	2.50
3029268	25HBS330(A,G)50	CNRH*3617A**	58PH*090−16	28600	11.5	14.00	29200	3.58	8.2	18100	2.52
3029313	25HBS330(A,G)50	CNRH*3617A**+TDR		28600	10.5	13.00	29400	3.44	8.1	18900	2.44
3029289	25HBS330(A,G)50	CNRV*3014A**	58CV(A,X)070−12	28400	11.2	13.50	29200	3.52	8.2	18100	2.48
3029288	25HBS330(A,G)50	CNRV*3014A**+TDR		28600	10.5	13.00	29600	3.44	8.1	18900	2.44
3029292	25HBS330(A,G)50	CNRV*3017A**	58CV(A,X)090−16	28400	11.5	14.00	29200	3.56	8.3	18000	2.52
3123119	25HBS330(A,G)50	CNRV*3017A**	58MEB040−12	28800	11.6	14.00	29200	3.62	8.3	18100	2.56
3123120	25HBS330(A,G)50	CNRV*3017A**	58MEB060−12	28800	11.6	14.00	29200	3.62	8.3	18100	2.54
3123121	25HBS330(A,G)50	CNRV*3017A**	58MEB080−12	28800	11.6	14.00	29200	3.62	8.3	18100	2.54
3123122	25HBS330(A,G)50	CNRV*3017A**	58MEB080−16	29000	11.5	14.00	29200	3.62	8.3	18200	2.56
3029291	25HBS330(A,G)50	CNRV*3017A**	58MV(B,C)060−14	28400	11.5	14.00	29200	3.52	8.2	18000	2.50
3029262	25HBS330(A,G)50	CNRV*3017A**	58PH*070−16	28600	11.5	13.50	29400	3.56	8.2	18200	2.50
3029290	25HBS330(A,G)50	CNRV*3017A**+TDR		28600	10.5	13.00	29600	3.44	8.1	18900	2.44
3029295	25HBS330(A,G)50	CNRV*3617A**	58CV(A,X)090−16	28400	11.5	14.00	29000	3.56	8.3	18000	2.52
3123123	25HBS330(A,G)50	CNRV*3617A**	58MEB040−12	28800	11.6	14.00	29200	3.62	8.3	18100	2.56
3123124	25HBS330(A,G)50	CNRV*3617A**	58MEB060−12	28800	11.6	14.00	29200	3.62	8.3	18100	2.54
3123125	25HBS330(A,G)50	CNRV*3617A**	58MEB080−12	28800	11.6	14.00	29200	3.62	8.3	18100	2.54
3123126	25HBS330(A,G)50	CNRV*3617A**	58MEB080−16	29000	11.5	14.00	29200	3.62	8.3	18200	2.56
3029294	25HBS330(A,G)50	CNRV*3617A**	58MV(B,C)060−14	28400	11.5	14.00	29000	3.52	8.2	18000	2.50
3029263	25HBS330(A,G)50	CNRV*3617A**	58PH*070−16	28600	11.5	13.50	29400	3.56	8.2	18200	2.50
3029293	25HBS330(A,G)50	CNRV*3617A**+TDR		28600	10.5	13.00	29400	3.46	8.1	18900	2.44
3029300	25HBS330(A,G)50	CNRV*3621A**	58CV(A,X)110−20	28600	11.5	14.00	29000	3.56	8.3	18000	2.52
3029297	25HBS330(A,G)50	CNRV*3621A**	58MV(B,C)080−14	28400	11.5	14.00	29000	3.54	8.2	18100	2.50
3029298	25HBS330(A,G)50	CNRV*3621A**	58MV(B,C)080−20	28400	11.5	14.00	29000	3.54	8.2	18000	2.50
3029299	25HBS330(A,G)50	CNRV*3621A**	58MV(B,C)100−20	28400	11.5	14.00	29000	3.54	8.3	18000	2.52
3029264	25HBS330(A,G)50	CNRV*3621A**	58PH*090−16	28600	11.5	14.00	29200	3.58	8.2	18100	2.52
3029296	25HBS330(A,G)50	CNRV*3621A**+TDR		28600	10.5	13.00	29400	3.46	8.1	18900	2.44
3029333	25HBS330(A,G)50	CSRH*3012A**	58CV(A,X)070−12	28400	11.5	14.00	29200	3.54	8.2	18100	2.50
3029334	25HBS330(A,G)50	CSRH*3012A**	58CV(A,X)090−16	28400	11.5	14.00	29200	3.56	8.3	18000	2.52
3029335	25HBS330(A,G)50	CSRH*3012A**	58CV(A,X)110−20	28400	11.5	14.00	29200	3.56	8.3	18100	2.52
3029336	25HBS330(A,G)50	CSRH*3012A**	58CV(A,X)135−22	28600	11.5	14.00	29200	3.58	8.3	18000	2.52
3029337	25HBS330(A,G)50	CSRH*3012A**	58CV(A,X)155−22	28600	11.5	14.00	29200	3.58	8.3	18000	2.52
3123135	25HBS330(A,G)50	CSRH*3012A**	58MEB040−12	28800	11.6	14.00	29200	3.62	8.3	18100	2.54
3123136	25HBS330(A,G)50	CSRH*3012A**	58MEB060−12	29000	11.6	14.00	29200	3.62	8.3	18100	2.54
3123137	25HBS330(A,G)50	CSRH*3012A**	58MEB080−12	28800	11.6	14.00	29200	3.60	8.3	18100	2.54
3123138	25HBS330(A,G)50	CSRH*3012A**	58MEB080−16	29000	11.5	14.00	29200	3.62	8.3	18200	2.54
3029327	25HBS330(A,G)50	CSRH*3012A**	58MV(B,C)040−14	28400	11.5	14.00	29200	3.54	8.2	18100	2.50
3029328	25HBS330(A,G)50	CSRH*3012A**	58MV(B,C)060−14	28400	11.5	14.00	29200	3.54	8.2	18100	2.50
3029329	25HBS330(A,G)50	CSRH*3012A**	58MV(B,C)080−14	28400	11.5	14.00	29200	3.54	8.2	18100	2.50
3029330	25HBS330(A,G)50	CSRH*3012A**	58MV(B,C)080−20	28400	11.5	14.00	29200	3.54	8.3	18100	2.50
3029331	25HBS330(A,G)50	CSRH*3012A**	58MV(B,C)100−20	28400	11.5	14.00	29200	3.56	8.3	18100	2.52
3029332	25HBS330(A,G)50	CSRH*3012A**	58MV(B,C)120−20	28400	11.5	14.00	29200	3.54	8.2	18000	2.50
3029269	25HBS330(A,G)50	CSRH*3012A**	58PH*070−16	28600	11.5	13.75	29400	3.54	8.2	18200	2.50
3029270	25HBS330(A,G)50	CSRH*3012A**	58PH*090−16	28600	11.5	14.00	29200	3.56	8.2	18100	2.52
3029326	25HBS330(A,G)50	CSRH*3012A**+TDR		28800	10.5	13.00	29600	3.46	8.1	18900	2.44
3029345	25HBS330(A,G)50	CSRH*3612A**	58CV(A,X)070−12	28600	11.5	14.00	28800	3.62	8.4	18100	2.54
3029346	25HBS330(A,G)50	CSRH*3612A**	58CV(A,X)090−16	28600	11.7	14.00	28800	3.64	8.5	18000	2.56
3029347	25HBS330(A,G)50	CSRH*3612A**	58CV(A,X)110−20	28600	11.7	14.00	28600	3.66	8.5	18100	2.56
3029348	25HBS330(A,G)50	CSRH*3612A**	58CV(A,X)135−22	28600	11.7	14.00	28600	3.66	8.5	18000	2.58
3029349	25HBS330(A,G)50	CSRH*3612A**	58CV(A,X)155−22	28600	11.7	14.00	28600	3.66	8.5	18000	2.58
3123139	25HBS330(A,G)50	CSRH*3612A**	58MEB040−12	29600	12.0	14.00	28400	3.70	8.2	18200	2.60
3123140	25HBS330(A,G)50	CSRH*3612A**	58MEB060−12	28800	12.0	14.00	28400	3.70	8.2	18200	2.60
3123141	25HBS330(A,G)50	CSRH*3612A**	58MEB080−12	28600	12.0	14.00	28400	3.70	8.2	18200	2.60
3123142	25HBS330(A,G)50	CSRH*3612A**	58MEB080−16	29800	12.0	14.00	28200	3.70	8.2	18300	2.60
3029339	25HBS330(A,G)50	CSRH*3612A**	58MV(B,C)040−14	28600	11.5	14.00	28800	3.62	8.4	18100	2.54
3029340	25HBS330(A,G)50	CSRH*3612A**	58MV(B,C)060−14	28600	11.7	14.00	28800	3.62	8.4	18100	2.54
3029341	25HBS330(A,G)50	CSRH*3612A**	58MV(B,C)080−14	28600	11.7	14.00	28800	3.62	8.4	18100	2.56
3029342	25HBS330(A,G)50	CSRH*3612A**	58MV(B,C)080−20	28600	11.7	14.00	28800	3.62	8.4	18100	2.56
3029343	25HBS330(A,G)50	CSRH*3612A**	58MV(B,C)100−20	28600	11.7	14.00	28800	3.64	8.5	18100	2.56
3029344	25HBS330(A,G)50	CSRH*3612A**	58MV(B,C)120−20	28600	11.7	14.00	28800	3.64	8.4	18000	2.56
3029271	25HBS330(A,G)50	CSRH*3612A**	58PH*070−16	29400	11.5	14.25	28800	3.62	8.5	18300	2.56
3029272	25HBS330(A,G)50	CSRH*3612A**	58PH*090−16	29400	12.0	14.50	28800	3.68	8.6	18200	2.58
3029338	25HBS330(A,G)50	CSRH*3612A**+TDR		28400	10.8	13.00	29000	3.50	8.3	19000	2.48
3029358	25HBS331(A,G)30	†FC4DNF030		29400	10.8	13.00	28000	3.48	7.7	17500	2.40
3029429	25HBS331(A,G)30	FC4DN(F,B)036		29600	10.8	13.00	27400	3.40	7.7	17700	2.38
3029432	25HBS331(A,G)30	FK4DN(B,F)003		29400	11.5	13.50	27200	3.48	7.8	17100	2.42
3029433	25HBS331(A,G)30	FK4DN(B,F)005		30000	11.5	14.00	23400	3.30	7.8	17200	2.50
3029430	25HBS331(A,G)30	FK4DNF001		28800	11.0	13.20	28000	3.42	7.7	17300	2.36
3029431	25HBS331(A,G)30	FK4DNF002		29200	11.2	13.50	28000	3.54	7.8	17300	2.42
3029367	25HBS331(A,G)30	CAR**3014A**	58CV(A,X)070−12	28800	11.0	13.20	27600	3.40	7.7	17300	2.36
3029369	25HBS331(A,G)30	CAR**3017A**	58CV(A,X)090−16	29000	11.2	13.50	27600	3.44	7.7	17200	2.40
3111314	25HBS331(A,G)30	CAR**3017A**	58MEB040−12	29400	11.2	13.50	27600	3.50	7.8	17300	2.42
3111315	25HBS331(A,G)30	CAR**3017A**	58MEB060−12	29400	11.2	13.50	27600	3.50	7.8	17400	2.42
3111316	25HBS331(A,G)30	CAR**3017A**	58MEB080−12	29200	11.2	13.50	27600	3.48	7.7	17300	2.42
3111317	25HBS331(A,G)30	CAR**3017A**	58MEB080−16	29400	11.1	13.00	27600	3.50	7.8	17400	2.42
3029368	25HBS331(A,G)30	CAR**3017A**	58MV(B,C)060−14	28800	11.0	13.20	27600	3.42	7.7	17200	2.38
3029359	25HBS331(A,G)30	CAR**3017A**	58PH*070−16	29000	11.0	13.00	27800	3.44	7.7	17400	2.38
3029370	25HBS331(A,G)30	CAR**3614A**	58CV(A,X)070−12	29000	11.0	13.20	27400	3.42	7.7	17300	2.38
3029372	25HBS331(A,G)30	CAR**3617A**	58CV(A,X)090−16	29000	11.2	13.50	27400	3.44	7.7	17200	2.40
3111318	25HBS331(A,G)30	CAR**3617A**	58MEB040−12	29400	11.3	13.50	27200	3.50	7.9	17300	2.44
3111319	25HBS331(A,G)30	CAR**3617A**	58MEB060−12	29600	11.3	13.50	27200	3.50	7.8	17400	2.44

See notes on page 31

COMBINATION RATINGS CONTINUED

ARI Ref. No.	Model Number	Coil Model Number	Furnace Model Number	Cooling Capacity	EER	SEER	High Temp		HSPF	Low Temp	
							E Capacity	E COP		H Capacity	H COP
3111320	25HBS331(A,G)30	CAR**3617A**	58MEB080−12	29400	11.3	13.50	27400	3.50	7.8	17300	2.44
3111321	25HBS331(A,G)30	CAR**3617A**	58MEB080−16	29600	11.2	13.50	27200	3.50	7.9	17500	2.44
3029371	25HBS331(A,G)30	CAR**3617A**	58MV(B,C)060−14	29000	11.0	13.20	27400	3.42	7.7	17200	2.38
3029360	25HBS331(A,G)30	CAR**3617A**	58PH*070−16	29200	11.0	13.00	27400	3.44	7.7	17500	2.40
3029376	25HBS331(A,G)30	CAR**3621A**	58CV(A,X)110−20	29200	11.2	13.50	27400	3.46	7.7	17200	2.42
3029373	25HBS331(A,G)30	CAR**3621A**	58MV(B,C)080−14	29000	11.2	13.50	27400	3.44	7.7	17200	2.40
3029374	25HBS331(A,G)30	CAR**3621A**	58MV(B,C)080−20	29000	11.2	13.50	27400	3.44	7.7	17200	2.40
3029375	25HBS331(A,G)30	CAR**3621A**	58MV(B,C)100−20	29200	11.2	13.50	27400	3.44	7.7	17200	2.40
3029361	25HBS331(A,G)30	CAR**3621A**	58PH*090−16	29600	11.0	13.50	27200	3.50	7.8	17400	2.44
3029391	25HBS331(A,G)30	CNRH*3017A**	58CV(A,X)070−12	29000	11.0	13.20	27600	3.42	7.7	17300	2.38
3029392	25HBS331(A,G)30	CNRH*3017A**	58CV(A,X)090−16	29000	11.2	13.50	27600	3.44	7.7	17200	2.40
3029393	25HBS331(A,G)30	CNRH*3017A**	58CV(A,X)110−20	29000	11.0	13.20	27600	3.44	7.7	17200	2.40
3029394	25HBS331(A,G)30	CNRH*3017A**	58CV(A,X)135−22	29000	11.2	13.50	27600	3.46	7.7	17200	2.40
3029395	25HBS331(A,G)30	CNRH*3017A**	58CV(A,X)155−22	29000	11.2	13.50	27400	3.46	7.7	17200	2.40
3111330	25HBS331(A,G)30	CNRH*3017A**	58MEB040−12	29400	11.2	13.50	27600	3.50	7.8	17300	2.42
3111331	25HBS331(A,G)30	CNRH*3017A**	58MEB060−12	29400	11.2	13.20	27600	3.48	7.8	17400	2.42
3111332	25HBS331(A,G)30	CNRH*3017A**	58MEB080−12	29000	11.2	13.50	27600	3.48	7.7	17300	2.42
3111333	25HBS331(A,G)30	CNRH*3017A**	58MEB080−16	29400	11.1	13.20	27600	3.50	7.8	17400	2.42
3029385	25HBS331(A,G)30	CNRH*3017A**	58MV(B,C)040−14	28800	11.0	13.20	27600	3.40	7.7	17300	2.38
3029386	25HBS331(A,G)30	CNRH*3017A**	58MV(B,C)060−14	28800	11.0	13.20	27600	3.42	7.7	17200	2.38
3029387	25HBS331(A,G)30	CNRH*3017A**	58MV(B,C)080−14	29000	11.0	13.20	27600	3.42	7.7	17300	2.38
3029388	25HBS331(A,G)30	CNRH*3017A**	58MV(B,C)080−20	29000	11.0	13.20	27600	3.42	7.7	17300	2.38
3029389	25HBS331(A,G)30	CNRH*3017A**	58MV(B,C)100−20	29000	11.0	13.20	27600	3.44	7.7	17200	2.38
3029390	25HBS331(A,G)30	CNRH*3017A**	58MV(B,C)120−20	29000	11.0	13.20	27600	3.42	7.7	17200	2.38
3029363	25HBS331(A,G)30	CNRH*3017A**	58PH*090−16	29200	11.0	13.25	27600	3.46	7.7	17300	2.40
3029402	25HBS331(A,G)30	CNRH*3617A**	58CV(A,X)070−12	29000	11.0	13.20	27600	3.42	7.7	17300	2.38
3029403	25HBS331(A,G)30	CNRH*3617A**	58CV(A,X)090−16	29000	11.2	13.50	27600	3.44	7.7	17200	2.40
3029404	25HBS331(A,G)30	CNRH*3617A**	58CV(A,X)110−20	29000	11.0	13.20	27600	3.44	7.7	17200	2.40
3029405	25HBS331(A,G)30	CNRH*3617A**	58CV(A,X)135−22	29000	11.2	13.50	27600	3.46	7.7	17200	2.40
3029406	25HBS331(A,G)30	CNRH*3617A**	58CV(A,X)155−22	29000	11.2	13.50	27400	3.46	7.7	17200	2.40
3111334	25HBS331(A,G)30	CNRH*3617A**	58MEB040−12	29400	11.2	13.50	27600	3.50	7.8	17300	2.42
3111335	25HBS331(A,G)30	CNRH*3617A**	58MEB060−12	29400	11.2	13.20	27600	3.48	7.8	17400	2.42
3111336	25HBS331(A,G)30	CNRH*3617A**	58MEB080−12	29000	11.2	13.50	27600	3.48	7.7	17300	2.42
3111337	25HBS331(A,G)30	CNRH*3617A**	58MEB080−16	29400	11.1	13.20	27600	3.50	7.8	17400	2.42
3029396	25HBS331(A,G)30	CNRH*3617A**	58MV(B,C)040−14	28800	11.0	13.20	27600	3.40	7.7	17300	2.38
3029397	25HBS331(A,G)30	CNRH*3617A**	58MV(B,C)060−14	28800	11.0	13.20	27600	3.42	7.7	17200	2.38
3029398	25HBS331(A,G)30	CNRH*3617A**	58MV(B,C)080−14	29000	11.0	13.20	27600	3.42	7.7	17300	2.38
3029399	25HBS331(A,G)30	CNRH*3617A**	58MV(B,C)080−20	29000	11.0	13.20	27600	3.42	7.7	17300	2.38
3029400	25HBS331(A,G)30	CNRH*3617A**	58MV(B,C)100−20	29000	11.0	13.20	27600	3.44	7.7	17200	2.38
3029401	25HBS331(A,G)30	CNRH*3617A**	58MV(B,C)120−20	29000	11.0	13.20	27600	3.42	7.7	17200	2.38
3029364	25HBS331(A,G)30	CNRH*3617A**	58PH*090−16	29200	11.0	13.25	27600	3.46	7.7	17300	2.40
3029378	25HBS331(A,G)30	CNRV*3017A**	58CV(A,X)090−16	29000	11.2	13.50	27600	3.44	7.7	17200	2.40
3111322	25HBS331(A,G)30	CNRV*3017A**	58MEB040−12	29400	11.2	13.50	27600	3.50	7.8	17300	2.42
3111323	25HBS331(A,G)30	CNRV*3017A**	58MEB060−12	29400	11.2	13.20	27600	3.48	7.8	17400	2.42
3111324	25HBS331(A,G)30	CNRV*3017A**	58MEB080−12	29200	11.2	13.50	27600	3.48	7.7	17300	2.42
3111325	25HBS331(A,G)30	CNRV*3017A**	58MEB080−16	29400	11.1	13.20	27600	3.50	7.8	17400	2.42
3029377	25HBS331(A,G)30	CNRV*3017A**	58MV(B,C)060−14	28800	11.0	13.20	27600	3.42	7.7	17200	2.38
3029380	25HBS331(A,G)30	CNRV*3617A**	58CV(A,X)090−16	29000	11.2	13.50	27600	3.44	7.7	17200	2.40
3111326	25HBS331(A,G)30	CNRV*3617A**	58MEB040−12	29400	11.2	13.50	27600	3.50	7.8	17300	2.42
3111327	25HBS331(A,G)30	CNRV*3617A**	58MEB060−12	29400	11.2	13.20	27600	3.48	7.8	17400	2.42
3111328	25HBS331(A,G)30	CNRV*3617A**	58MEB080−12	29200	11.2	13.50	27600	3.48	7.7	17300	2.42
3111329	25HBS331(A,G)30	CNRV*3617A**	58MEB080−16	29400	11.1	13.20	27600	3.50	7.8	17400	2.42
3029379	25HBS331(A,G)30	CNRV*3617A**	58MV(B,C)060−14	28800	11.0	13.20	27600	3.42	7.7	17200	2.38
3029384	25HBS331(A,G)30	CNRV*3621A**	58CV(A,X)110−20	29000	11.0	13.20	27600	3.44	7.7	17200	2.40
3029381	25HBS331(A,G)30	CNRV*3621A**	58MV(B,C)080−14	29000	11.0	13.20	27600	3.42	7.7	17300	2.38
3029382	25HBS331(A,G)30	CNRV*3621A**	58MV(B,C)080−20	29000	11.0	13.20	27600	3.42	7.7	17300	2.38
3029383	25HBS331(A,G)30	CNRV*3621A**	58MV(B,C)100−20	29000	11.0	13.20	27600	3.44	7.7	17200	2.40
3029362	25HBS331(A,G)30	CNRV*3621A**	58PH*090−16	29200	11.0	13.00	27600	3.46	7.7	17300	2.40
3029413	25HBS331(A,G)30	CSRH*3012A**	58CV(A,X)070−12	29000	11.0	13.20	27600	3.40	7.7	17300	2.38
3029414	25HBS331(A,G)30	CSRH*3012A**	58CV(A,X)090−16	29200	11.2	13.50	27400	3.44	7.7	17200	2.40
3029415	25HBS331(A,G)30	CSRH*3012A**	58CV(A,X)110−20	29200	11.0	13.20	27400	3.44	7.7	17300	2.40
3029416	25HBS331(A,G)30	CSRH*3012A**	58CV(A,X)135−22	29200	11.2	13.50	27400	3.44	7.7	17200	2.40
3029417	25HBS331(A,G)30	CSRH*3012A**	58CV(A,X)155−22	29200	11.2	13.50	27400	3.44	7.7	17200	2.40
3111338	25HBS331(A,G)30	CSRH*3012A**	58MEB040−12	29400	11.2	13.50	27400	3.48	7.7	17300	2.42
3111339	25HBS331(A,G)30	CSRH*3012A**	58MEB060−12	29400	11.2	13.50	27400	3.48	7.8	17400	2.42
3111340	25HBS331(A,G)30	CSRH*3012A**	58MEB080−12	29400	11.2	13.50	27400	3.46	7.7	17300	2.42
3111341	25HBS331(A,G)30	CSRH*3012A**	58MEB080−16	29600	11.1	13.20	27400	3.48	7.8	17500	2.42
3029407	25HBS331(A,G)30	CSRH*3012A**	58MV(B,C)040−14	29000	11.0	13.20	27600	3.40	7.7	17300	2.38
3029408	25HBS331(A,G)30	CSRH*3012A**	58MV(B,C)060−14	29000	11.0	13.20	27600	3.40	7.7	17300	2.38
3029409	25HBS331(A,G)30	CSRH*3012A**	58MV(B,C)080−14	29200	11.0	13.20	27600	3.40	7.7	17300	2.38
3029410	25HBS331(A,G)30	CSRH*3012A**	58MV(B,C)080−20	29200	11.0	13.20	27400	3.42	7.7	17300	2.38
3029411	25HBS331(A,G)30	CSRH*3012A**	58MV(B,C)100−20	29200	11.0	13.20	27400	3.42	7.7	17300	2.38
3029412	25HBS331(A,G)30	CSRH*3012A**	58MV(B,C)120−20	29000	11.0	13.20	27400	3.42	7.7	17200	2.38
3029424	25HBS331(A,G)30	CSRH*3612A**	58CV(A,X)070−12	29600	11.5	13.50	27000	3.46	7.8	17300	2.42
3029425	25HBS331(A,G)30	CSRH*3612A**	58CV(A,X)090−16	29800	11.5	13.50	26800	3.48	7.8	17200	2.44
3029426	25HBS331(A,G)30	CSRH*3612A**	58CV(A,X)110−20	29800	11.5	13.50	26800	3.48	7.8	17300	2.44
3029427	25HBS331(A,G)30	CSRH*3612A**	58CV(A,X)135−22	29800	11.5	13.50	26800	3.50	7.9	17200	2.44
3029428	25HBS331(A,G)30	CSRH*3612A**	58CV(A,X)155−22	29800	11.5	13.50	26800	3.50	7.9	17200	2.44
3111342	25HBS331(A,G)30	CSRH*3612A**	58MEB040−12	29600	11.5	13.50	26800	3.54	8.0	17400	2.48
3111343	25HBS331(A,G)30	CSRH*3612A**	58MEB060−12	29600	11.5	13.50	26600	3.54	8.0	17400	2.48
3111344	25HBS331(A,G)30	CSRH*3612A**	58MEB080−12	29600	11.5	13.50	26800	3.52	7.9	17400	2.46
3111345	25HBS331(A,G)30	CSRH*3612A**	58MEB080−16	29600	11.5	13.50	26600	3.52	8.0	17500	2.48
3029418	25HBS331(A,G)30	CSRH*3612A**	58MV(B,C)040−14	29600	11.5	13.50	27000	3.46	7.8	17300	2.42
3029419	25HBS331(A,G)30	CSRH*3612A**	58MV(B,C)060−14	29600	11.5	13.50	27000	3.46	7.8	17300	2.42
3029420	25HBS331(A,G)30	CSRH*3612A**	58MV(B,C)080−14	29800	11.5	13.50	27000	3.46	7.8	17300	2.42
3029421	25HBS331(A,G)30	CSRH*3612A**	58MV(B,C)080−20	29600	11.5	13.50	27000	3.46	7.8	17300	2.42
3029422	25HBS331(A,G)30	CSRH*3612A**	58MV(B,C)100−20	29800	11.5	13.50	27000	3.48	7.8	17300	2.42

See notes on page 31

COMBINATION RATINGS CONTINUED

ARI Ref. No.	Model Number	Coil Model Number	Furnace Model Number	Cooling Capacity	EER	SEER	High Temp		HSPF	Low Temp	
							E Capacity	E COP		H Capacity	H COP
3029423	25HBS331(A,G)30	CSRH*3612A**	58MV(B,C)120–20	29600	11.5	13.50	27000	3.46	7.8	17200	2.42
3029365	25HBS331(A,G)30	CSRH*3612A**	58PH*070–16	30000	11.0	13.50	27000	3.46	7.8	17500	2.42
3029366	25HBS331(A,G)30	CSRH*3612A**	58PH*090–16	30000	11.5	13.50	26800	3.50	7.9	17400	2.46
3029434	25HBS331(A,G)50	†FC4DNF030		29400	10.8	13.00	28000	3.48	7.7	17500	2.40
3029505	25HBS331(A,G)50	FC4DN(F,B)036		29600	10.8	13.00	27400	3.40	7.7	17700	2.38
3029508	25HBS331(A,G)50	FK4DN(B,F)003		29400	11.5	13.50	27200	3.48	7.8	17100	2.42
3029509	25HBS331(A,G)50	FK4DN(B,F)005		30000	11.5	14.00	23400	3.30	7.8	17200	2.50
3029506	25HBS331(A,G)50	FK4DNF001		28800	11.0	13.20	28000	3.42	7.7	17300	2.36
3029507	25HBS331(A,G)50	FK4DNF002		29200	11.2	13.50	28000	3.54	7.8	17300	2.42
3029443	25HBS331(A,G)50	CAR**3014A**	58CV(A,X)070–12	28800	11.0	13.20	27600	3.40	7.7	17300	2.36
3029445	25HBS331(A,G)50	CAR**3017A**	58CV(A,X)090–16	29000	11.2	13.50	27600	3.44	7.7	17200	2.40
3123143	25HBS331(A,G)50	CAR**3017A**	58MEB040–12	29400	11.2	13.50	27600	3.50	7.8	17300	2.42
3123144	25HBS331(A,G)50	CAR**3017A**	58MEB060–12	29400	11.2	13.50	27600	3.50	7.8	17400	2.42
3123145	25HBS331(A,G)50	CAR**3017A**	58MEB080–12	29200	11.2	13.50	27600	3.48	7.7	17300	2.42
3123146	25HBS331(A,G)50	CAR**3017A**	58MEB080–16	29400	11.1	13.00	27600	3.50	7.8	17400	2.42
3029444	25HBS331(A,G)50	CAR**3017A**	58MV(B,C)060–14	28800	11.0	13.20	27600	3.42	7.7	17200	2.38
3029435	25HBS331(A,G)50	CAR**3017A**	58PH*070–16	29000	11.0	13.00	27800	3.44	7.7	17400	2.38
3029446	25HBS331(A,G)50	CAR**3614A**	58CV(A,X)070–12	29000	11.0	13.20	27400	3.42	7.7	17300	2.38
3029448	25HBS331(A,G)50	CAR**3617A**	58CV(A,X)090–16	29000	11.2	13.50	27400	3.44	7.7	17200	2.40
3123147	25HBS331(A,G)50	CAR**3617A**	58MEB040–12	29400	11.3	13.50	27200	3.50	7.9	17300	2.44
3123148	25HBS331(A,G)50	CAR**3617A**	58MEB060–12	29600	11.3	13.50	27200	3.50	7.8	17400	2.44
3123149	25HBS331(A,G)50	CAR**3617A**	58MEB080–12	29400	11.3	13.50	27400	3.50	7.8	17300	2.44
3123150	25HBS331(A,G)50	CAR**3617A**	58MEB080–16	29600	11.2	13.50	27200	3.50	7.9	17500	2.44
3029447	25HBS331(A,G)50	CAR**3617A**	58MV(B,C)060–14	29000	11.0	13.20	27400	3.42	7.7	17200	2.38
3029436	25HBS331(A,G)50	CAR**3617A**	58PH*070–16	29200	11.0	13.00	27400	3.44	7.7	17500	2.40
3029452	25HBS331(A,G)50	CAR**3621A**	58CV(A,X)110–20	29200	11.2	13.50	27400	3.46	7.7	17200	2.42
3029449	25HBS331(A,G)50	CAR**3621A**	58MV(B,C)080–14	29000	11.2	13.50	27400	3.44	7.7	17200	2.40
3029450	25HBS331(A,G)50	CAR**3621A**	58MV(B,C)080–20	29000	11.2	13.50	27400	3.44	7.7	17200	2.40
3029451	25HBS331(A,G)50	CAR**3621A**	58MV(B,C)100–20	29200	11.2	13.50	27400	3.44	7.7	17200	2.40
3029437	25HBS331(A,G)50	CAR**3621A**	58PH*090–16	29600	11.0	13.50	27200	3.50	7.8	17400	2.44
3029467	25HBS331(A,G)50	CNRH*3017A**	58CV(A,X)070–12	29000	11.0	13.20	27600	3.42	7.7	17300	2.38
3029468	25HBS331(A,G)50	CNRH*3017A**	58CV(A,X)090–16	29000	11.2	13.50	27600	3.44	7.7	17200	2.40
3029469	25HBS331(A,G)50	CNRH*3017A**	58CV(A,X)110–20	29000	11.0	13.20	27600	3.44	7.7	17200	2.40
3029470	25HBS331(A,G)50	CNRH*3017A**	58CV(A,X)135–22	29000	11.2	13.50	27600	3.46	7.7	17200	2.40
3029471	25HBS331(A,G)50	CNRH*3017A**	58CV(A,X)155–22	29000	11.2	13.50	27400	3.46	7.7	17200	2.40
3123159	25HBS331(A,G)50	CNRH*3017A**	58MEB040–12	29400	11.2	13.50	27600	3.50	7.8	17300	2.42
3123160	25HBS331(A,G)50	CNRH*3017A**	58MEB060–12	29400	11.2	13.20	27600	3.48	7.8	17400	2.42
3123161	25HBS331(A,G)50	CNRH*3017A**	58MEB080–12	29000	11.2	13.50	27600	3.48	7.7	17300	2.42
3123162	25HBS331(A,G)50	CNRH*3017A**	58MEB080–16	29400	11.1	13.20	27600	3.50	7.8	17400	2.42
3029461	25HBS331(A,G)50	CNRH*3017A**	58MV(B,C)040–14	28800	11.0	13.20	27600	3.40	7.7	17300	2.38
3029462	25HBS331(A,G)50	CNRH*3017A**	58MV(B,C)060–14	28800	11.0	13.20	27600	3.42	7.7	17200	2.38
3029463	25HBS331(A,G)50	CNRH*3017A**	58MV(B,C)080–14	29000	11.0	13.20	27600	3.42	7.7	17300	2.38
3029464	25HBS331(A,G)50	CNRH*3017A**	58MV(B,C)080–20	29000	11.0	13.20	27600	3.42	7.7	17300	2.38
3029465	25HBS331(A,G)50	CNRH*3017A**	58MV(B,C)100–20	29000	11.0	13.20	27600	3.44	7.7	17200	2.38
3029466	25HBS331(A,G)50	CNRH*3017A**	58MV(B,C)120–20	29000	11.0	13.20	27600	3.42	7.7	17200	2.38
3029439	25HBS331(A,G)50	CNRH*3017A**	58PH*090–16	29200	11.0	13.25	27600	3.46	7.7	17300	2.40
3029478	25HBS331(A,G)50	CNRH*3617A**	58CV(A,X)070–12	29000	11.0	13.20	27600	3.42	7.7	17300	2.38
3029479	25HBS331(A,G)50	CNRH*3617A**	58CV(A,X)090–16	29000	11.2	13.50	27600	3.44	7.7	17200	2.40
3029480	25HBS331(A,G)50	CNRH*3617A**	58CV(A,X)110–20	29000	11.0	13.20	27600	3.44	7.7	17200	2.40
3029481	25HBS331(A,G)50	CNRH*3617A**	58CV(A,X)135–22	29000	11.2	13.50	27600	3.46	7.7	17200	2.40
3029482	25HBS331(A,G)50	CNRH*3617A**	58CV(A,X)155–22	29000	11.2	13.50	27400	3.46	7.7	17200	2.40
3123163	25HBS331(A,G)50	CNRH*3617A**	58MEB040–12	29400	11.2	13.50	27600	3.50	7.8	17300	2.42
3123164	25HBS331(A,G)50	CNRH*3617A**	58MEB060–12	29400	11.2	13.20	27600	3.48	7.8	17400	2.42
3123165	25HBS331(A,G)50	CNRH*3617A**	58MEB080–12	29000	11.2	13.50	27600	3.48	7.7	17300	2.42
3123166	25HBS331(A,G)50	CNRH*3617A**	58MEB080–16	29400	11.1	13.20	27600	3.50	7.8	17400	2.42
3029472	25HBS331(A,G)50	CNRH*3617A**	58MV(B,C)040–14	28800	11.0	13.20	27600	3.40	7.7	17300	2.38
3029473	25HBS331(A,G)50	CNRH*3617A**	58MV(B,C)060–14	28800	11.0	13.20	27600	3.42	7.7	17200	2.38
3029474	25HBS331(A,G)50	CNRH*3617A**	58MV(B,C)080–14	29000	11.0	13.20	27600	3.42	7.7	17300	2.38
3029475	25HBS331(A,G)50	CNRH*3617A**	58MV(B,C)080–20	29000	11.0	13.20	27600	3.42	7.7	17300	2.38
3029476	25HBS331(A,G)50	CNRH*3617A**	58MV(B,C)100–20	29000	11.0	13.20	27600	3.44	7.7	17200	2.38
3029477	25HBS331(A,G)50	CNRH*3617A**	58MV(B,C)120–20	29000	11.0	13.20	27600	3.42	7.7	17200	2.38
3029440	25HBS331(A,G)50	CNRH*3617A**	58PH*090–16	29200	11.0	13.25	27600	3.46	7.7	17300	2.40
3029454	25HBS331(A,G)50	CNRV*3017A**	58CV(A,X)090–16	29000	11.2	13.50	27600	3.44	7.7	17200	2.40
3123151	25HBS331(A,G)50	CNRV*3017A**	58MEB040–12	29400	11.2	13.50	27600	3.50	7.8	17300	2.42
3123152	25HBS331(A,G)50	CNRV*3017A**	58MEB060–12	29400	11.2	13.20	27600	3.48	7.8	17400	2.42
3123153	25HBS331(A,G)50	CNRV*3017A**	58MEB080–12	29200	11.2	13.50	27600	3.48	7.7	17300	2.42
3123154	25HBS331(A,G)50	CNRV*3017A**	58MEB080–16	29400	11.1	13.20	27600	3.50	7.8	17400	2.42
3029453	25HBS331(A,G)50	CNRV*3017A**	58MV(B,C)060–14	28800	11.0	13.20	27600	3.42	7.7	17200	2.38
3029456	25HBS331(A,G)50	CNRV*3617A**	58CV(A,X)090–16	29000	11.2	13.50	27600	3.44	7.7	17200	2.40
3123155	25HBS331(A,G)50	CNRV*3617A**	58MEB040–12	29400	11.2	13.50	27600	3.50	7.8	17300	2.42
3123156	25HBS331(A,G)50	CNRV*3617A**	58MEB060–12	29400	11.2	13.20	27600	3.48	7.8	17400	2.42
3123157	25HBS331(A,G)50	CNRV*3617A**	58MEB080–12	29200	11.2	13.50	27600	3.48	7.7	17300	2.42
3123158	25HBS331(A,G)50	CNRV*3617A**	58MEB080–16	29400	11.1	13.20	27600	3.50	7.8	17400	2.42
3029455	25HBS331(A,G)50	CNRV*3617A**	58MV(B,C)060–14	28800	11.0	13.20	27600	3.42	7.7	17200	2.38
3029460	25HBS331(A,G)50	CNRV*3621A**	58CV(A,X)110–20	29000	11.0	13.20	27600	3.44	7.7	17200	2.40
3029457	25HBS331(A,G)50	CNRV*3621A**	58MV(B,C)080–14	29000	11.0	13.20	27600	3.42	7.7	17300	2.38
3029458	25HBS331(A,G)50	CNRV*3621A**	58MV(B,C)080–20	29000	11.0	13.20	27600	3.42	7.7	17300	2.38
3029459	25HBS331(A,G)50	CNRV*3621A**	58MV(B,C)100–20	29000	11.0	13.20	27600	3.44	7.7	17200	2.40
3029438	25HBS331(A,G)50	CNRV*3621A**	58PH*090–16	29200	11.0	13.00	27600	3.46	7.7	17300	2.40
3029489	25HBS331(A,G)50	CSRH*3012A**	58CV(A,X)070–12	29000	11.0	13.20	27600	3.40	7.7	17300	2.38
3029490	25HBS331(A,G)50	CSRH*3012A**	58CV(A,X)090–16	29200	11.2	13.50	27400	3.44	7.7	17200	2.40
3029491	25HBS331(A,G)50	CSRH*3012A**	58CV(A,X)110–20	29200	11.0	13.20	27400	3.44	7.7	17300	2.40
3029492	25HBS331(A,G)50	CSRH*3012A**	58CV(A,X)135–22	29200	11.2	13.50	27400	3.44	7.7	17200	2.40
3029493	25HBS331(A,G)50	CSRH*3012A**	58CV(A,X)155–22	29200	11.2	13.50	27400	3.44	7.7	17200	2.40
3123167	25HBS331(A,G)50	CSRH*3012A**	58MEB040–12	29400	11.2	13.50	27400	3.48	7.7	17300	2.42
3123168	25HBS331(A,G)50	CSRH*3012A**	58MEB060–12	29400	11.2	13.50	27400	3.48	7.8	17400	2.42

See notes on page 31

COMBINATION RATINGS CONTINUED

ARI Ref. No.	Model Number	Coil Model Number	Furnace Model Number	Cooling Capacity	EER	SEER	High Temp		HSPF	Low Temp	
							E Capacity	E COP		H Capacity	H COP
3123169	25HBS331(A,G)50	CSRH*3012A**	58MEB080–12	29400	11.2	13.50	27400	3.46	7.7	17300	2.42
3123170	25HBS331(A,G)50	CSRH*3012A**	58MEB080–16	29600	11.1	13.20	27400	3.48	7.8	17500	2.42
3029483	25HBS331(A,G)50	CSRH*3012A**	58MV(B,C)040–14	29000	11.0	13.20	27600	3.40	7.7	17300	2.38
3029484	25HBS331(A,G)50	CSRH*3012A**	58MV(B,C)060–14	29000	11.0	13.20	27600	3.40	7.7	17300	2.38
3029485	25HBS331(A,G)50	CSRH*3012A**	58MV(B,C)080–14	29200	11.0	13.20	27600	3.40	7.7	17300	2.38
3029486	25HBS331(A,G)50	CSRH*3012A**	58MV(B,C)080–20	29200	11.0	13.20	27400	3.42	7.7	17300	2.38
3029487	25HBS331(A,G)50	CSRH*3012A**	58MV(B,C)100–20	29200	11.0	13.20	27400	3.42	7.7	17300	2.38
3029488	25HBS331(A,G)50	CSRH*3012A**	58MV(B,C)120–20	29000	11.0	13.20	27400	3.42	7.7	17200	2.38
3029500	25HBS331(A,G)50	CSRH*3612A**	58CV(A,X)070–12	29600	11.5	13.50	27000	3.46	7.8	17300	2.42
3029501	25HBS331(A,G)50	CSRH*3612A**	58CV(A,X)090–16	29800	11.5	13.50	26800	3.48	7.8	17200	2.44
3029502	25HBS331(A,G)50	CSRH*3612A**	58CV(A,X)110–20	29800	11.5	13.50	26800	3.48	7.8	17300	2.44
3029503	25HBS331(A,G)50	CSRH*3612A**	58CV(A,X)135–22	29800	11.5	13.50	26800	3.50	7.9	17200	2.44
3029504	25HBS331(A,G)50	CSRH*3612A**	58CV(A,X)155–22	29800	11.5	13.50	26800	3.50	7.9	17200	2.44
3123171	25HBS331(A,G)50	CSRH*3612A**	58MEB040–12	29600	11.5	13.50	26800	3.54	8.0	17400	2.48
3123172	25HBS331(A,G)50	CSRH*3612A**	58MEB060–12	29600	11.5	13.50	26600	3.54	8.0	17400	2.48
3123173	25HBS331(A,G)50	CSRH*3612A**	58MEB080–12	29600	11.5	13.50	26800	3.52	7.9	17400	2.46
3123174	25HBS331(A,G)50	CSRH*3612A**	58MEB080–16	29600	11.5	13.50	26600	3.52	8.0	17500	2.48
3029494	25HBS331(A,G)50	CSRH*3612A**	58MV(B,C)040–14	29600	11.5	13.50	27000	3.46	7.8	17300	2.42
3029495	25HBS331(A,G)50	CSRH*3612A**	58MV(B,C)060–14	29600	11.5	13.50	27000	3.46	7.8	17300	2.42
3029496	25HBS331(A,G)50	CSRH*3612A**	58MV(B,C)080–14	29800	11.5	13.50	27000	3.46	7.8	17300	2.42
3029497	25HBS331(A,G)50	CSRH*3612A**	58MV(B,C)080–20	29600	11.5	13.50	27000	3.46	7.8	17300	2.42
3029498	25HBS331(A,G)50	CSRH*3612A**	58MV(B,C)100–20	29800	11.5	13.50	27000	3.48	7.8	17300	2.42
3029499	25HBS331(A,G)50	CSRH*3612A**	58MV(B,C)120–20	29600	11.5	13.50	27000	3.46	7.8	17200	2.42
3029441	25HBS331(A,G)50	CSRH*3612A**	58PH*070–16	30000	11.0	13.50	27000	3.46	7.8	17500	2.42
3029442	25HBS331(A,G)50	CSRH*3612A**	58PH*090–16	30000	11.5	13.50	26800	3.50	7.9	17400	2.46
3029510	25HBS336(A,G)30	†FC4DN(F,B)036		34600	11.0	13.00	34400	3.46	8.0	20600	2.44
3029585	25HBS336(A,G)30	FC4DN(F,B)042		35400	11.0	13.00	30400	3.28	7.9	20800	2.46
3029587	25HBS336(A,G)30	FK4DN(B,F)003		34400	11.2	13.50	34600	3.52	8.0	20000	2.46
3029586	25HBS336(A,G)30	FK4DNF002		34000	10.8	13.00	36000	3.60	8.0	20400	2.42
3029525	25HBS336(A,G)30	CAR**3617A**	58CV(A,X)090–16	34000	11.0	13.20	35000	3.50	8.0	20200	2.42
3111346	25HBS336(A,G)30	CAR**3617A**	58MEB040–12	34200	11.0	13.00	34800	3.50	8.0	20200	2.44
3111347	25HBS336(A,G)30	CAR**3617A**	58MEB060–12	34200	11.0	13.00	34600	3.50	8.0	20400	2.44
3111348	25HBS336(A,G)30	CAR**3617A**	58MEB080–12	34200	11.0	13.00	34800	3.50	8.0	20200	2.44
3111349	25HBS336(A,G)30	CAR**3617A**	58MEB080–16	34200	11.0	13.00	34600	3.50	8.0	20400	2.44
3029524	25HBS336(A,G)30	CAR**3617A**	58MV(B,C)060–14	34000	10.8	13.00	35000	3.48	7.9	20200	2.42
3029527	25HBS336(A,G)30	CAR**3621A**	58CV(A,X)110–20	34200	11.0	13.20	34800	3.50	8.0	20200	2.44
3111350	25HBS336(A,G)30	CAR**3621A**	58MEB100–20	34400	11.2	13.25	34600	3.54	8.0	20200	2.46
3029526	25HBS336(A,G)30	CAR**3621A**	58MV(B,C)100–20	34000	11.0	13.20	35000	3.50	8.0	20200	2.42
3029511	25HBS336(A,G)30	CAR**3621A**	58PH*090–16	34400	11.0	13.25	34600	3.52	8.0	20200	2.46
3029512	25HBS336(A,G)30	CAR**3621A**	58PH*110–20	34600	11.0	13.25	34400	3.54	8.0	20200	2.48
3029531	25HBS336(A,G)30	CAR**4221A**	58CV(A,X)110–20	34400	11.0	13.20	34200	3.52	8.0	20200	2.46
3029528	25HBS336(A,G)30	CAR**4221A**	58MV(B,C)080–14	34200	10.8	13.00	34600	3.48	8.0	20400	2.42
3029529	25HBS336(A,G)30	CAR**4221A**	58MV(B,C)080–20	34200	11.0	13.20	34400	3.50	8.0	20200	2.44
3029530	25HBS336(A,G)30	CAR**4221A**	58MV(B,C)100–20	34400	11.0	13.20	34400	3.52	8.0	20200	2.44
3029513	25HBS336(A,G)30	CAR**4221A**	58PH*090–16	34800	11.0	13.25	33800	3.54	8.0	20200	2.48
3029514	25HBS336(A,G)30	CAR**4221A**	58PH*110–20	34800	11.0	13.50	33600	3.54	8.2	20200	2.48
3029534	25HBS336(A,G)30	CAR**4224A**	58CV(A,X)135–22	34400	11.2	13.50	34200	3.54	8.1	20200	2.46
3029535	25HBS336(A,G)30	CAR**4224A**	58CV(A,X)155–22	34600	11.2	13.50	34200	3.56	8.1	20000	2.48
3029532	25HBS336(A,G)30	CAR**4224A**	58MV(B,C)040–14	34200	10.8	13.00	34600	3.48	8.0	20200	2.42
3029533	25HBS336(A,G)30	CAR**4224A**	58MV(B,C)120–20	34400	11.0	13.20	34400	3.52	8.0	20200	2.44
3029548	25HBS336(A,G)30	CNRH*3617A**	58CV(A,X)090–16	34000	10.8	13.00	35200	3.48	7.9	20200	2.42
3029549	25HBS336(A,G)30	CNRH*3617A**	58CV(A,X)110–20	34000	10.8	13.00	35200	3.48	7.9	20200	2.42
3029550	25HBS336(A,G)30	CNRH*3617A**	58CV(A,X)135–22	34000	10.8	13.00	35200	3.48	7.9	20200	2.42
3029551	25HBS336(A,G)30	CNRH*3617A**	58CV(A,X)155–22	34000	11.0	13.20	35200	3.50	8.0	20200	2.44
3111357	25HBS336(A,G)30	CNRH*3617A**	58MEB040–12	34000	11.0	13.00	35200	3.50	8.0	20200	2.42
3111358	25HBS336(A,G)30	CNRH*3617A**	58MEB060–12	34000	11.0	13.00	35200	3.48	8.0	20400	2.42
3111359	25HBS336(A,G)30	CNRH*3617A**	58MEB080–12	34000	11.0	13.00	35200	3.48	8.0	20200	2.42
3111360	25HBS336(A,G)30	CNRH*3617A**	58MEB080–16	34000	11.0	13.00	35200	3.48	8.0	20400	2.42
3111361	25HBS336(A,G)30	CNRH*3617A**	58MEB100–20	34000	11.0	13.20	35200	3.50	8.0	20000	2.42
3029545	25HBS336(A,G)30	CNRH*3617A**	58MV(B,C)060–14	33800	10.8	13.00	35400	3.46	7.9	20200	2.40
3029546	25HBS336(A,G)30	CNRH*3617A**	58MV(B,C)100–20	33800	10.8	13.00	35400	3.46	7.9	20200	2.40
3029547	25HBS336(A,G)30	CNRH*3617A**	58MV(B,C)120–20	33800	10.8	13.00	35400	3.46	7.9	20200	2.40
3029519	25HBS336(A,G)30	CNRH*3617A**	58PH*090–16	34000	11.0	13.00	35200	3.50	8.0	20200	2.42
3029520	25HBS336(A,G)30	CNRH*3617A**	58PH*110–20	34200	11.0	13.00	35000	3.50	8.0	20200	2.44
3029558	25HBS336(A,G)30	CNRH*4221A**	58CV(A,X)070–12	34400	11.0	13.20	34400	3.52	8.0	20200	2.44
3029559	25HBS336(A,G)30	CNRH*4221A**	58CV(A,X)090–16	34600	11.2	13.50	34200	3.56	8.1	20000	2.48
3029560	25HBS336(A,G)30	CNRH*4221A**	58CV(A,X)110–20	34600	11.2	13.50	34200	3.58	8.1	20200	2.48
3029561	25HBS336(A,G)30	CNRH*4221A**	58CV(A,X)135–22	34600	11.2	13.50	34200	3.58	8.2	20000	2.50
3029562	25HBS336(A,G)30	CNRH*4221A**	58CV(A,X)155–22	34600	11.2	13.50	34000	3.60	8.2	20000	2.50
3111362	25HBS336(A,G)30	CNRH*4221A**	58MEB040–12	34600	11.1	13.20	34200	3.52	8.1	20400	2.46
3111363	25HBS336(A,G)30	CNRH*4221A**	58MEB060–12	34600	11.0	13.20	34000	3.52	8.1	20400	2.46
3111364	25HBS336(A,G)30	CNRH*4221A**	58MEB080–12	34600	11.0	13.20	34200	3.52	8.1	20400	2.46
3111365	25HBS336(A,G)30	CNRH*4221A**	58MEB080–16	34600	11.0	13.20	34200	3.50	8.1	20400	2.46
3111366	25HBS336(A,G)30	CNRH*4221A**	58MEB100–20	34600	11.2	13.25	34200	3.54	8.1	20200	2.46
3029552	25HBS336(A,G)30	CNRH*4221A**	58MV(B,C)040–14	34400	11.0	13.20	34400	3.52	8.0	20200	2.44
3029553	25HBS336(A,G)30	CNRH*4221A**	58MV(B,C)060–14	34400	11.2	13.50	34400	3.54	8.1	20200	2.46
3029554	25HBS336(A,G)30	CNRH*4221A**	58MV(B,C)080–14	34400	11.0	13.20	34400	3.52	8.0	20200	2.44
3029555	25HBS336(A,G)30	CNRH*4221A**	58MV(B,C)080–20	34400	11.0	13.20	34400	3.52	8.0	20200	2.46
3029556	25HBS336(A,G)30	CNRH*4221A**	58MV(B,C)100–20	34400	11.2	13.50	34400	3.54	8.1	20200	2.46
3029557	25HBS336(A,G)30	CNRH*4221A**	58MV(B,C)120–20	34400	11.2	13.50	34400	3.56	8.1	20000	2.48
3029521	25HBS336(A,G)30	CNRH*4221A**	58PH*090–16	34600	11.0	13.25	34200	3.52	8.0	20200	2.46
3029522	25HBS336(A,G)30	CNRH*4221A**	58PH*110–20	34800	11.0	13.50	34000	3.54	8.0	20200	2.48
3029537	25HBS336(A,G)30	CNRV*3617A**	58CV(A,X)090–16	34000	10.8	13.00	35200	3.48	7.9	20200	2.42
3111351	25HBS336(A,G)30	CNRV*3617A**	58MEB040–12	34000	11.0	13.00	35200	3.50	8.0	20200	2.42
3111352	25HBS336(A,G)30	CNRV*3617A**	58MEB060–12	34000	11.0	13.00	35200	3.48	8.0	20400	2.42
3111353	25HBS336(A,G)30	CNRV*3617A**	58MEB080–12	34000	11.0	13.00	35200	3.48	8.0	20200	2.42

See notes on page 31

COMBINATION RATINGS CONTINUED

ARI Ref. No.	Model Number	Coil Model Number	Furnace Model Number	Cooling Capacity	EER	SEER	High Temp		HSPF	Low Temp	
							E Capacity	E COP		H Capacity	H COP
3111354	25HBS336(A,G)30	CNRV*3617A**	58MEB080−16	34000	11.0	13.00	35200	3.48	8.0	20400	2.42
3029536	25HBS336(A,G)30	CNRV*3617A**	58MV(B,C)060−14	33800	10.8	13.00	35400	3.46	7.9	20200	2.40
3029540	25HBS336(A,G)30	CNRV*3621A**	58CV(A,X)110−20	34000	10.8	13.00	35200	3.48	7.9	20200	2.42
3111355	25HBS336(A,G)30	CNRV*3621A**	58MEB100−20	34000	11.0	13.20	35200	3.52	8.0	20000	2.44
3029538	25HBS336(A,G)30	CNRV*3621A**	58MV(B,C)080−20	33800	10.8	13.00	35400	3.46	7.9	20200	2.40
3029539	25HBS336(A,G)30	CNRV*3621A**	58MV(B,C)100−20	33800	10.8	13.00	35400	3.46	7.9	20200	2.40
3029515	25HBS336(A,G)30	CNRV*3621A**	58PH*090−16	34200	11.0	13.00	35200	3.50	8.0	20200	2.44
3029516	25HBS336(A,G)30	CNRV*3621A**	58PH*110−20	34200	11.0	13.25	35000	3.52	8.0	20200	2.44
3029544	25HBS336(A,G)30	CNRV*4221A**	58CV(A,X)110−20	34600	11.2	13.50	34200	3.58	8.1	20200	2.48
3111356	25HBS336(A,G)30	CNRV*4221A**	58MEB100−20	34600	11.2	13.25	34200	3.54	8.1	20200	2.46
3029541	25HBS336(A,G)30	CNRV*4221A**	58MV(B,C)080−14	34400	11.0	13.20	34400	3.52	8.0	20200	2.44
3029542	25HBS336(A,G)30	CNRV*4221A**	58MV(B,C)080−20	34400	11.0	13.20	34400	3.52	8.0	20200	2.46
3029543	25HBS336(A,G)30	CNRV*4221A**	58MV(B,C)100−20	34400	11.2	13.50	34400	3.54	8.1	20200	2.46
3029517	25HBS336(A,G)30	CNRV*4221A**	58PH*090−16	34600	11.0	13.25	34200	3.52	8.0	20200	2.46
3029518	25HBS336(A,G)30	CNRV*4221A**	58PH*110−20	34800	11.0	13.50	34000	3.54	8.0	20200	2.48
3029569	25HBS336(A,G)30	CSRH*3612A**	58CV(A,X)070−12	34800	11.0	13.20	33600	3.48	8.0	20400	2.44
3029570	25HBS336(A,G)30	CSRH*3612A**	58CV(A,X)090−16	34800	11.2	13.50	33600	3.52	8.1	20200	2.48
3029571	25HBS336(A,G)30	CSRH*3612A**	58CV(A,X)110−20	35000	11.2	13.50	33400	3.52	8.1	20400	2.48
3029572	25HBS336(A,G)30	CSRH*3612A**	58CV(A,X)135−22	35000	11.2	13.50	33400	3.54	8.1	20200	2.48
3029573	25HBS336(A,G)30	CSRH*3612A**	58CV(A,X)155−22	35000	11.2	13.50	33200	3.56	8.2	20200	2.50
3111367	25HBS336(A,G)30	CSRH*3612A**	58MEB040−12	35200	11.2	13.50	32400	3.50	8.1	20400	2.48
3111368	25HBS336(A,G)30	CSRH*3612A**	58MEB060−12	35200	11.2	13.20	32000	3.46	8.1	20400	2.48
3111369	25HBS336(A,G)30	CSRH*3612A**	58MEB080−12	35000	11.2	13.20	32400	3.50	8.1	20400	2.48
3111370	25HBS336(A,G)30	CSRH*3612A**	58MEB080−16	35200	11.2	13.20	32200	3.46	8.1	20400	2.48
3111371	25HBS336(A,G)30	CSRH*3612A**	58MEB100−20	35000	11.3	13.50	32200	3.56	8.1	20200	2.50
3029563	25HBS336(A,G)30	CSRH*3612A**	58MV(B,C)040−14	34600	11.0	13.20	33800	3.48	8.0	20400	2.44
3029564	25HBS336(A,G)30	CSRH*3612A**	58MV(B,C)060−14	34800	11.0	13.20	33600	3.52	8.1	20400	2.46
3029565	25HBS336(A,G)30	CSRH*3612A**	58MV(B,C)080−14	34600	10.8	13.00	33800	3.48	8.0	20400	2.44
3029566	25HBS336(A,G)30	CSRH*3612A**	58MV(B,C)080−20	34800	11.0	13.20	33600	3.50	8.0	20400	2.46
3029567	25HBS336(A,G)30	CSRH*3612A**	58MV(B,C)100−20	34800	11.0	13.20	33600	3.50	8.1	20400	2.46
3029568	25HBS336(A,G)30	CSRH*3612A**	58MV(B,C)120−20	34800	11.0	13.20	33600	3.52	8.1	20200	2.46
3029523	25HBS336(A,G)30	CSRH*3612A**	58PH*070−16	34800	11.0	13.00	33200	3.44	8.0	20600	2.44
3029580	25HBS336(A,G)30	CSRH*4212A**	58CV(A,X)070−12	35000	11.0	13.20	32200	3.44	8.0	20400	2.46
3029581	25HBS336(A,G)30	CSRH*4212A**	58CV(A,X)090−16	35200	11.2	13.50	32000	3.48	8.1	20200	2.50
3029582	25HBS336(A,G)30	CSRH*4212A**	58CV(A,X)110−20	35200	11.2	13.50	31800	3.48	8.1	20400	2.50
3029583	25HBS336(A,G)30	CSRH*4212A**	58CV(A,X)135−22	35200	11.2	13.50	32000	3.50	8.1	20200	2.50
3029584	25HBS336(A,G)30	CSRH*4212A**	58CV(A,X)155−22	35200	11.2	13.50	31800	3.50	8.2	20200	2.52
3111372	25HBS336(A,G)30	CSRH*4212A**	58MEB060−12	35600	11.2	13.50	30400	3.40	8.1	20400	2.50
3111373	25HBS336(A,G)30	CSRH*4212A**	58MEB080−12	35400	11.3	13.50	30800	3.44	8.1	20400	2.50
3111374	25HBS336(A,G)30	CSRH*4212A**	58MEB080−16	35400	11.2	13.50	30600	3.40	8.1	20400	2.50
3111375	25HBS336(A,G)30	CSRH*4212A**	58MEB100−20	35400	11.4	13.50	31400	3.50	8.1	20200	2.52
3029574	25HBS336(A,G)30	CSRH*4212A**	58MV(B,C)040−14	35000	11.0	13.20	32400	3.44	8.0	20400	2.46
3029575	25HBS336(A,G)30	CSRH*4212A**	58MV(B,C)060−14	35000	11.2	13.50	32200	3.48	8.1	20400	2.48
3029576	25HBS336(A,G)30	CSRH*4212A**	58MV(B,C)080−14	34800	11.0	13.20	32400	3.44	8.0	20400	2.44
3029577	25HBS336(A,G)30	CSRH*4212A**	58MV(B,C)080−20	35000	11.2	13.50	32200	3.46	8.0	20400	2.48
3029578	25HBS336(A,G)30	CSRH*4212A**	58MV(B,C)100−20	35000	11.2	13.50	32000	3.46	8.1	20400	2.48
3029579	25HBS336(A,G)30	CSRH*4212A**	58MV(B,C)120−20	35000	11.2	13.50	32400	3.48	8.1	20400	2.48
3029588	25HBS336(A,G)50	†FC4DN(F,B)036		34600	11.0	13.00	34400	3.46	8.0	20600	2.44
3029663	25HBS336(A,G)50	FC4DN(F,B)042		35400	11.0	13.00	30400	3.28	7.9	20800	2.46
3029665	25HBS336(A,G)50	FK4DN(B,F)003		34400	11.2	13.50	34600	3.52	8.0	20000	2.46
3029664	25HBS336(A,G)50	FK4DNF002		34000	10.8	13.00	36000	3.60	8.0	20400	2.42
3029603	25HBS336(A,G)50	CAR**3617A**	58CV(A,X)090−16	34000	11.0	13.20	35000	3.50	8.0	20200	2.42
3123175	25HBS336(A,G)50	CAR**3617A**	58MEB040−12	34200	11.0	13.00	34800	3.50	8.0	20200	2.44
3123176	25HBS336(A,G)50	CAR**3617A**	58MEB060−12	34200	11.0	13.00	34600	3.50	8.0	20400	2.44
3123177	25HBS336(A,G)50	CAR**3617A**	58MEB080−12	34200	11.0	13.00	34800	3.50	8.0	20200	2.44
3123178	25HBS336(A,G)50	CAR**3617A**	58MEB080−16	34200	11.0	13.00	34600	3.50	8.0	20400	2.44
3029602	25HBS336(A,G)50	CAR**3617A**	58MV(B,C)060−14	34000	10.8	13.00	35000	3.48	7.9	20200	2.42
3029605	25HBS336(A,G)50	CAR**3621A**	58CV(A,X)110−20	34200	11.0	13.20	34800	3.50	8.0	20200	2.44
3123179	25HBS336(A,G)50	CAR**3621A**	58MEB100−20	34400	11.2	13.25	34600	3.54	8.0	20200	2.46
3029604	25HBS336(A,G)50	CAR**3621A**	58MV(B,C)100−20	34000	11.0	13.20	35000	3.50	8.0	20200	2.42
3029589	25HBS336(A,G)50	CAR**3621A**	58PH*090−16	34400	11.0	13.25	34600	3.52	8.0	20200	2.46
3029590	25HBS336(A,G)50	CAR**3621A**	58PH*110−20	34600	11.0	13.25	34400	3.54	8.0	20200	2.48
3029609	25HBS336(A,G)50	CAR**4221A**	58CV(A,X)110−20	34400	11.0	13.20	34200	3.52	8.0	20200	2.46
3029606	25HBS336(A,G)50	CAR**4221A**	58MV(B,C)080−14	34200	10.8	13.00	34600	3.48	8.0	20400	2.42
3029607	25HBS336(A,G)50	CAR**4221A**	58MV(B,C)080−20	34200	11.0	13.20	34400	3.50	8.0	20200	2.44
3029608	25HBS336(A,G)50	CAR**4221A**	58MV(B,C)100−20	34400	11.0	13.20	34400	3.52	8.0	20200	2.44
3029591	25HBS336(A,G)50	CAR**4221A**	58PH*090−16	34800	11.0	13.25	33800	3.54	8.0	20200	2.48
3029592	25HBS336(A,G)50	CAR**4221A**	58PH*110−20	34800	11.0	13.50	33600	3.54	8.2	20200	2.48
3029612	25HBS336(A,G)50	CAR**4224A**	58CV(A,X)135−22	34400	11.2	13.50	34200	3.54	8.1	20200	2.46
3029613	25HBS336(A,G)50	CAR**4224A**	58CV(A,X)155−22	34600	11.2	13.50	34200	3.56	8.1	20000	2.48
3029610	25HBS336(A,G)50	CAR**4224A**	58MV(B,C)040−14	34200	10.8	13.00	34600	3.48	8.0	20200	2.42
3029611	25HBS336(A,G)50	CAR**4224A**	58MV(B,C)120−20	34400	11.0	13.20	34400	3.52	8.0	20200	2.44
3029626	25HBS336(A,G)50	CNRH*3617A**	58CV(A,X)090−16	34000	10.8	13.00	35200	3.48	7.9	20200	2.42
3029627	25HBS336(A,G)50	CNRH*3617A**	58CV(A,X)110−20	34000	10.8	13.00	35200	3.48	7.9	20200	2.42
3029628	25HBS336(A,G)50	CNRH*3617A**	58CV(A,X)135−22	34000	10.8	13.00	35200	3.48	7.9	20200	2.42
3029629	25HBS336(A,G)50	CNRH*3617A**	58CV(A,X)155−22	34000	11.0	13.20	35200	3.50	8.0	20200	2.44
3123186	25HBS336(A,G)50	CNRH*3617A**	58MEB040−12	34000	11.0	13.00	35200	3.50	8.0	20200	2.42
3123187	25HBS336(A,G)50	CNRH*3617A**	58MEB060−12	34000	11.0	13.00	35200	3.48	8.0	20400	2.42
3123188	25HBS336(A,G)50	CNRH*3617A**	58MEB080−12	34000	11.0	13.00	35200	3.48	8.0	20200	2.42
3123189	25HBS336(A,G)50	CNRH*3617A**	58MEB080−16	34000	11.0	13.00	35200	3.48	8.0	20400	2.42
3123190	25HBS336(A,G)50	CNRH*3617A**	58MEB100−20	34000	11.0	13.20	35200	3.50	8.0	20000	2.42
3029623	25HBS336(A,G)50	CNRH*3617A**	58MV(B,C)060−14	33800	10.8	13.00	35400	3.46	7.9	20200	2.40
3029624	25HBS336(A,G)50	CNRH*3617A**	58MV(B,C)100−20	33800	10.8	13.00	35400	3.46	7.9	20200	2.40
3029625	25HBS336(A,G)50	CNRH*3617A**	58MV(B,C)120−20	33800	10.8	13.00	35400	3.46	7.9	20200	2.40
3029597	25HBS336(A,G)50	CNRH*3617A**	58PH*090−16	34000	11.0	13.00	35200	3.50	8.0	20200	2.42
3029598	25HBS336(A,G)50	CNRH*3617A**	58PH*110−20	34200	11.0	13.00	35000	3.50	8.0	20200	2.44

See notes on page 31

COMBINATION RATINGS CONTINUED

ARI Ref. No.	Model Number	Coil Model Number	Furnace Model Number	Cooling Capacity	EER	SEER	High Temp		HSPF	Low Temp	
							E Capacity	E COP		H Capacity	H COP
3029636	25HBS336(A,G)50	CNRH*4221A**	58CV(A,X)070−12	34400	11.0	13.20	34400	3.52	8.0	20200	2.44
3029637	25HBS336(A,G)50	CNRH*4221A**	58CV(A,X)090−16	34600	11.2	13.50	34200	3.56	8.1	20000	2.48
3029638	25HBS336(A,G)50	CNRH*4221A**	58CV(A,X)110−20	34600	11.2	13.50	34200	3.58	8.1	20200	2.48
3029639	25HBS336(A,G)50	CNRH*4221A**	58CV(A,X)135−22	34600	11.2	13.50	34200	3.58	8.2	20000	2.50
3029640	25HBS336(A,G)50	CNRH*4221A**	58CV(A,X)155−22	34600	11.2	13.50	34000	3.60	8.2	20000	2.50
3123191	25HBS336(A,G)50	CNRH*4221A**	58MEB040−12	34600	11.1	13.20	34200	3.52	8.1	20400	2.46
3123192	25HBS336(A,G)50	CNRH*4221A**	58MEB060−12	34600	11.0	13.20	34000	3.52	8.1	20400	2.46
3123193	25HBS336(A,G)50	CNRH*4221A**	58MEB080−12	34600	11.0	13.20	34200	3.52	8.1	20400	2.46
3123194	25HBS336(A,G)50	CNRH*4221A**	58MEB080−16	34600	11.0	13.20	34200	3.50	8.1	20400	2.46
3123195	25HBS336(A,G)50	CNRH*4221A**	58MEB100−20	34600	11.2	13.25	34200	3.54	8.1	20200	2.46
3029630	25HBS336(A,G)50	CNRH*4221A**	58MV(B,C)040−14	34400	11.0	13.20	34400	3.52	8.0	20200	2.44
3029631	25HBS336(A,G)50	CNRH*4221A**	58MV(B,C)060−14	34400	11.2	13.50	34400	3.54	8.1	20200	2.46
3029632	25HBS336(A,G)50	CNRH*4221A**	58MV(B,C)080−14	34400	11.0	13.20	34400	3.52	8.0	20200	2.44
3029633	25HBS336(A,G)50	CNRH*4221A**	58MV(B,C)080−20	34400	11.0	13.20	34400	3.52	8.0	20200	2.46
3029634	25HBS336(A,G)50	CNRH*4221A**	58MV(B,C)100−20	34400	11.2	13.50	34400	3.54	8.1	20200	2.46
3029635	25HBS336(A,G)50	CNRH*4221A**	58MV(B,C)120−20	34400	11.2	13.50	34400	3.56	8.1	20000	2.48
3029599	25HBS336(A,G)50	CNRH*4221A**	58PH*090−16	34600	11.0	13.25	34200	3.52	8.0	20200	2.46
3029600	25HBS336(A,G)50	CNRH*4221A**	58PH*110−20	34800	11.0	13.50	34000	3.54	8.0	20200	2.48
3029615	25HBS336(A,G)50	CNRV*3617A**	58CV(A,X)090−16	34000	10.8	13.00	35200	3.48	7.9	20200	2.42
3123180	25HBS336(A,G)50	CNRV*3617A**	58MEB040−12	34000	11.0	13.00	35200	3.50	8.0	20200	2.42
3123181	25HBS336(A,G)50	CNRV*3617A**	58MEB060−12	34000	11.0	13.00	35200	3.48	8.0	20400	2.42
3123182	25HBS336(A,G)50	CNRV*3617A**	58MEB080−12	34000	11.0	13.00	35200	3.48	8.0	20200	2.42
3123183	25HBS336(A,G)50	CNRV*3617A**	58MEB080−16	34000	11.0	13.00	35200	3.48	8.0	20400	2.42
3029614	25HBS336(A,G)50	CNRV*3617A**	58MV(B,C)060−14	33800	10.8	13.00	35400	3.46	7.9	20200	2.40
3029618	25HBS336(A,G)50	CNRV*3621A**	58CV(A,X)110−20	34000	10.8	13.00	35200	3.48	7.9	20200	2.42
3123184	25HBS336(A,G)50	CNRV*3621A**	58MEB100−20	34000	11.0	13.20	35200	3.52	8.0	20000	2.44
3029616	25HBS336(A,G)50	CNRV*3621A**	58MV(B,C)080−20	33800	10.8	13.00	35400	3.46	7.9	20200	2.40
3029617	25HBS336(A,G)50	CNRV*3621A**	58MV(B,C)100−20	33800	10.8	13.00	35400	3.46	7.9	20200	2.40
3029593	25HBS336(A,G)50	CNRV*3621A**	58PH*090−16	34200	11.0	13.00	35200	3.50	8.0	20200	2.44
3029594	25HBS336(A,G)50	CNRV*3621A**	58PH*110−20	34200	11.0	13.25	35000	3.52	8.0	20200	2.44
3029622	25HBS336(A,G)50	CNRV*4221A**	58CV(A,X)110−20	34600	11.2	13.50	34200	3.58	8.1	20200	2.48
3123185	25HBS336(A,G)50	CNRV*4221A**	58MEB100−20	34600	11.2	13.25	34200	3.54	8.1	20200	2.46
3029619	25HBS336(A,G)50	CNRV*4221A**	58MV(B,C)080−14	34400	11.0	13.20	34400	3.52	8.0	20200	2.44
3029620	25HBS336(A,G)50	CNRV*4221A**	58MV(B,C)080−20	34400	11.0	13.20	34400	3.52	8.0	20200	2.46
3029621	25HBS336(A,G)50	CNRV*4221A**	58MV(B,C)100−20	34400	11.2	13.50	34400	3.54	8.1	20200	2.46
3029595	25HBS336(A,G)50	CNRV*4221A**	58PH*090−16	34600	11.0	13.25	34200	3.52	8.0	20200	2.46
3029596	25HBS336(A,G)50	CNRV*4221A**	58PH*110−20	34800	11.0	13.50	34000	3.54	8.0	20200	2.48
3029647	25HBS336(A,G)50	CSRH*3612A**	58CV(A,X)070−12	34800	11.0	13.20	33600	3.48	8.0	20400	2.44
3029648	25HBS336(A,G)50	CSRH*3612A**	58CV(A,X)090−16	34800	11.2	13.50	33600	3.52	8.1	20200	2.48
3029649	25HBS336(A,G)50	CSRH*3612A**	58CV(A,X)110−20	35000	11.2	13.50	33400	3.52	8.1	20400	2.48
3029650	25HBS336(A,G)50	CSRH*3612A**	58CV(A,X)135−22	35000	11.2	13.50	33400	3.54	8.1	20200	2.48
3029651	25HBS336(A,G)50	CSRH*3612A**	58CV(A,X)155−22	35000	11.2	13.50	33200	3.56	8.2	20200	2.50
3123196	25HBS336(A,G)50	CSRH*3612A**	58MEB040−12	35200	11.2	13.50	32400	3.50	8.1	20400	2.48
3123197	25HBS336(A,G)50	CSRH*3612A**	58MEB060−12	35200	11.2	13.20	32000	3.46	8.1	20400	2.48
3123198	25HBS336(A,G)50	CSRH*3612A**	58MEB080−12	35000	11.2	13.20	32400	3.50	8.1	20400	2.48
3123199	25HBS336(A,G)50	CSRH*3612A**	58MEB080−16	35200	11.2	13.20	32200	3.46	8.1	20400	2.48
3123200	25HBS336(A,G)50	CSRH*3612A**	58MEB100−20	35000	11.3	13.50	32200	3.56	8.1	20200	2.50
3029641	25HBS336(A,G)50	CSRH*3612A**	58MV(B,C)040−14	34600	11.0	13.20	33800	3.48	8.0	20400	2.44
3029642	25HBS336(A,G)50	CSRH*3612A**	58MV(B,C)060−14	34800	11.0	13.20	33600	3.52	8.1	20400	2.46
3029643	25HBS336(A,G)50	CSRH*3612A**	58MV(B,C)080−14	34600	10.8	13.00	33800	3.48	8.0	20400	2.44
3029644	25HBS336(A,G)50	CSRH*3612A**	58MV(B,C)080−20	34800	11.0	13.20	33600	3.50	8.0	20400	2.46
3029645	25HBS336(A,G)50	CSRH*3612A**	58MV(B,C)100−20	34800	11.0	13.20	33600	3.50	8.1	20400	2.46
3029646	25HBS336(A,G)50	CSRH*3612A**	58MV(B,C)120−20	34800	11.0	13.20	33600	3.52	8.1	20200	2.46
3029601	25HBS336(A,G)50	CSRH*3612A**	58PH*070−16	34800	11.0	13.00	33200	3.44	8.0	20600	2.44
3029658	25HBS336(A,G)50	CSRH*4212A**	58CV(A,X)070−12	35000	11.0	13.20	32200	3.44	8.0	20400	2.46
3029659	25HBS336(A,G)50	CSRH*4212A**	58CV(A,X)090−16	35200	11.2	13.50	32000	3.48	8.1	20200	2.50
3029660	25HBS336(A,G)50	CSRH*4212A**	58CV(A,X)110−20	35200	11.2	13.50	31800	3.48	8.1	20400	2.50
3029661	25HBS336(A,G)50	CSRH*4212A**	58CV(A,X)135−22	35200	11.2	13.50	32000	3.50	8.1	20200	2.50
3029662	25HBS336(A,G)50	CSRH*4212A**	58CV(A,X)155−22	35200	11.2	13.50	31800	3.50	8.2	20200	2.52
3123201	25HBS336(A,G)50	CSRH*4212A**	58MEB060−12	35600	11.2	13.50	30400	3.40	8.1	20400	2.50
3123202	25HBS336(A,G)50	CSRH*4212A**	58MEB080−12	35400	11.3	13.50	30800	3.44	8.1	20400	2.50
3123203	25HBS336(A,G)50	CSRH*4212A**	58MEB080−16	35400	11.2	13.50	30600	3.40	8.1	20400	2.50
3123204	25HBS336(A,G)50	CSRH*4212A**	58MEB100−20	35400	11.4	13.50	31400	3.50	8.1	20200	2.52
3029652	25HBS336(A,G)50	CSRH*4212A**	58MV(B,C)040−14	35000	11.0	13.20	32400	3.44	8.0	20400	2.46
3029653	25HBS336(A,G)50	CSRH*4212A**	58MV(B,C)060−14	35000	11.2	13.50	32200	3.48	8.1	20400	2.48
3029654	25HBS336(A,G)50	CSRH*4212A**	58MV(B,C)080−14	34800	11.0	13.20	32400	3.44	8.0	20400	2.44
3029655	25HBS336(A,G)50	CSRH*4212A**	58MV(B,C)080−20	35000	11.2	13.50	32200	3.46	8.0	20400	2.48
3029656	25HBS336(A,G)50	CSRH*4212A**	58MV(B,C)100−20	35000	11.2	13.50	32000	3.46	8.1	20400	2.48
3029657	25HBS336(A,G)50	CSRH*4212A**	58MV(B,C)120−20	35000	11.2	13.50	32400	3.48	8.1	20400	2.48
3029666	25HBS336(A,G)60	†FC4DN(F,B)036		34600	11.0	13.00	34400	3.46	8.0	20600	2.44
3029741	25HBS336(A,G)60	FC4DN(F,B)042		35400	11.0	13.00	30400	3.28	7.9	20800	2.46
3029743	25HBS336(A,G)60	FK4DN(B,F)003		34400	11.2	13.50	34600	3.52	8.0	20000	2.46
3029742	25HBS336(A,G)60	FK4DNF002		34000	10.8	13.00	36000	3.60	8.0	20400	2.42
3029681	25HBS336(A,G)60	CAR**3617A**	58CV(A,X)090−16	34000	11.0	13.20	35000	3.50	8.0	20200	2.42
3123274	25HBS336(A,G)60	CAR**3617A**	58MEB040−12	34200	11.0	13.00	34800	3.50	8.0	20200	2.44
3123275	25HBS336(A,G)60	CAR**3617A**	58MEB060−12	34200	11.0	13.00	34600	3.50	8.0	20400	2.44
3123276	25HBS336(A,G)60	CAR**3617A**	58MEB080−12	34200	11.0	13.00	34800	3.50	8.0	20200	2.44
3123277	25HBS336(A,G)60	CAR**3617A**	58MEB080−16	34200	11.0	13.00	34600	3.50	8.0	20400	2.44
3029680	25HBS336(A,G)60	CAR**3617A**	58MV(B,C)060−14	34000	10.8	13.00	35000	3.48	7.9	20200	2.42
3029683	25HBS336(A,G)60	CAR**3621A**	58CV(A,X)110−20	34200	11.0	13.20	34800	3.50	8.0	20200	2.44
3123278	25HBS336(A,G)60	CAR**3621A**	58MEB100−20	34400	11.2	13.25	34600	3.54	8.0	20200	2.46
3029682	25HBS336(A,G)60	CAR**3621A**	58MV(B,C)100−20	34000	11.0	13.20	35000	3.50	8.0	20200	2.42
3029667	25HBS336(A,G)60	CAR**3621A**	58PH*090−16	34400	11.0	13.25	34600	3.52	8.0	20200	2.46
3029668	25HBS336(A,G)60	CAR**3621A**	58PH*110−20	34600	11.0	13.25	34400	3.54	8.0	20200	2.48
3029687	25HBS336(A,G)60	CAR**4221A**	58CV(A,X)110−20	34400	11.0	13.20	34200	3.52	8.0	20200	2.46
3029684	25HBS336(A,G)60	CAR**4221A**	58MV(B,C)080−14	34200	10.8	13.00	34600	3.48	8.0	20400	2.42

See notes on page 31

COMBINATION RATINGS CONTINUED

ARI Ref. No.	Model Number	Coil Model Number	Furnace Model Number	Cooling Capacity	EER	SEER	High Temp		HSPF	Low Temp	
							E Capacity	E COP		H Capacity	H COP
3029685	25HBS336(A,G)60	CAR**4221A**	58MV(B,C)080−20	34200	11.0	13.20	34400	3.50	8.0	20200	2.44
3029686	25HBS336(A,G)60	CAR**4221A**	58MV(B,C)100−20	34400	11.0	13.20	34400	3.52	8.0	20200	2.44
3029669	25HBS336(A,G)60	CAR**4221A**	58PH*090−16	34800	11.0	13.25	33800	3.54	8.0	20200	2.48
3029670	25HBS336(A,G)60	CAR**4221A**	58PH*110−20	34800	11.0	13.50	33600	3.54	8.2	20200	2.48
3029690	25HBS336(A,G)60	CAR**4224A**	58CV(A,X)135−22	34400	11.2	13.50	34200	3.54	8.1	20200	2.46
3029691	25HBS336(A,G)60	CAR**4224A**	58CV(A,X)155−22	34600	11.2	13.50	34200	3.56	8.1	20000	2.48
3029688	25HBS336(A,G)60	CAR**4224A**	58MV(B,C)040−14	34200	10.8	13.00	34600	3.48	8.0	20200	2.42
3029689	25HBS336(A,G)60	CAR**4224A**	58MV(B,C)120−20	34400	11.0	13.20	34400	3.52	8.0	20200	2.44
3029704	25HBS336(A,G)60	CNRH*3617A**	58CV(A,X)090−16	34000	10.8	13.00	35200	3.48	7.9	20200	2.42
3029705	25HBS336(A,G)60	CNRH*3617A**	58CV(A,X)110−20	34000	10.8	13.00	35200	3.48	7.9	20200	2.42
3029706	25HBS336(A,G)60	CNRH*3617A**	58CV(A,X)135−22	34000	10.8	13.00	35200	3.48	7.9	20200	2.42
3029707	25HBS336(A,G)60	CNRH*3617A**	58CV(A,X)155−22	34000	11.0	13.20	35200	3.50	8.0	20200	2.44
3123285	25HBS336(A,G)60	CNRH*3617A**	58MEB040−12	34000	11.0	13.00	35200	3.50	8.0	20200	2.42
3123286	25HBS336(A,G)60	CNRH*3617A**	58MEB060−12	34000	11.0	13.00	35200	3.48	8.0	20400	2.42
3123287	25HBS336(A,G)60	CNRH*3617A**	58MEB080−12	34000	11.0	13.00	35200	3.48	8.0	20200	2.42
3123288	25HBS336(A,G)60	CNRH*3617A**	58MEB080−16	34000	11.0	13.00	35200	3.48	8.0	20400	2.42
3123289	25HBS336(A,G)60	CNRH*3617A**	58MEB100−20	34000	11.0	13.20	35200	3.50	8.0	20000	2.42
3029701	25HBS336(A,G)60	CNRH*3617A**	58MV(B,C)060−14	33800	10.8	13.00	35400	3.46	7.9	20200	2.40
3029702	25HBS336(A,G)60	CNRH*3617A**	58MV(B,C)100−20	33800	10.8	13.00	35400	3.46	7.9	20200	2.40
3029703	25HBS336(A,G)60	CNRH*3617A**	58MV(B,C)120−20	33800	10.8	13.00	35400	3.46	7.9	20200	2.40
3029675	25HBS336(A,G)60	CNRH*3617A**	58PH*090−16	34000	11.0	13.00	35200	3.50	8.0	20200	2.42
3029676	25HBS336(A,G)60	CNRH*3617A**	58PH*110−20	34200	11.0	13.00	35000	3.50	8.0	20200	2.44
3029714	25HBS336(A,G)60	CNRH*4221A**	58CV(A,X)070−12	34400	11.0	13.20	34400	3.52	8.0	20200	2.44
3029715	25HBS336(A,G)60	CNRH*4221A**	58CV(A,X)090−16	34600	11.2	13.50	34200	3.56	8.1	20000	2.48
3029716	25HBS336(A,G)60	CNRH*4221A**	58CV(A,X)110−20	34600	11.2	13.50	34200	3.58	8.1	20200	2.48
3029717	25HBS336(A,G)60	CNRH*4221A**	58CV(A,X)135−22	34600	11.2	13.50	34200	3.58	8.2	20000	2.50
3029718	25HBS336(A,G)60	CNRH*4221A**	58CV(A,X)155−22	34600	11.2	13.50	34000	3.60	8.2	20000	2.50
3123290	25HBS336(A,G)60	CNRH*4221A**	58MEB040−12	34600	11.1	13.20	34200	3.52	8.1	20400	2.46
3123291	25HBS336(A,G)60	CNRH*4221A**	58MEB060−12	34600	11.0	13.20	34000	3.52	8.1	20400	2.46
3123292	25HBS336(A,G)60	CNRH*4221A**	58MEB080−12	34600	11.0	13.20	34200	3.52	8.1	20400	2.46
3123293	25HBS336(A,G)60	CNRH*4221A**	58MEB080−16	34600	11.0	13.20	34200	3.50	8.1	20400	2.46
3123294	25HBS336(A,G)60	CNRH*4221A**	58MEB100−20	34600	11.2	13.25	34200	3.54	8.1	20200	2.46
3029708	25HBS336(A,G)60	CNRH*4221A**	58MV(B,C)040−14	34400	11.0	13.20	34400	3.52	8.0	20200	2.44
3029709	25HBS336(A,G)60	CNRH*4221A**	58MV(B,C)060−14	34400	11.2	13.50	34400	3.54	8.1	20200	2.46
3029710	25HBS336(A,G)60	CNRH*4221A**	58MV(B,C)080−14	34400	11.0	13.20	34400	3.52	8.0	20200	2.44
3029711	25HBS336(A,G)60	CNRH*4221A**	58MV(B,C)080−20	34400	11.0	13.20	34400	3.52	8.0	20200	2.46
3029712	25HBS336(A,G)60	CNRH*4221A**	58MV(B,C)100−20	34400	11.2	13.50	34400	3.54	8.1	20200	2.46
3029713	25HBS336(A,G)60	CNRH*4221A**	58MV(B,C)120−20	34400	11.2	13.50	34400	3.56	8.1	20000	2.48
3029677	25HBS336(A,G)60	CNRH*4221A**	58PH*090−16	34600	11.0	13.25	34200	3.52	8.0	20200	2.46
3029678	25HBS336(A,G)60	CNRH*4221A**	58PH*110−20	34800	11.0	13.50	34000	3.54	8.0	20200	2.48
3029693	25HBS336(A,G)60	CNRV*3617A**	58CV(A,X)090−16	34000	10.8	13.00	35200	3.48	7.9	20200	2.42
3123279	25HBS336(A,G)60	CNRV*3617A**	58MEB040−12	34000	11.0	13.00	35200	3.50	8.0	20200	2.42
3123280	25HBS336(A,G)60	CNRV*3617A**	58MEB060−12	34000	11.0	13.00	35200	3.48	8.0	20400	2.42
3123281	25HBS336(A,G)60	CNRV*3617A**	58MEB080−12	34000	11.0	13.00	35200	3.48	8.0	20200	2.42
3123282	25HBS336(A,G)60	CNRV*3617A**	58MEB080−16	34000	11.0	13.00	35200	3.48	8.0	20400	2.42
3029692	25HBS336(A,G)60	CNRV*3617A**	58MV(B,C)060−14	33800	10.8	13.00	35400	3.46	7.9	20200	2.40
3029696	25HBS336(A,G)60	CNRV*3621A**	58CV(A,X)110−20	34000	10.8	13.00	35200	3.48	7.9	20200	2.42
3123283	25HBS336(A,G)60	CNRV*3621A**	58MEB100−20	34000	11.0	13.20	35200	3.52	8.0	20000	2.44
3029694	25HBS336(A,G)60	CNRV*3621A**	58MV(B,C)080−20	33800	10.8	13.00	35400	3.46	7.9	20200	2.40
3029695	25HBS336(A,G)60	CNRV*3621A**	58MV(B,C)100−20	33800	10.8	13.00	35400	3.46	7.9	20200	2.40
3029671	25HBS336(A,G)60	CNRV*3621A**	58PH*090−16	34200	11.0	13.00	35200	3.50	8.0	20200	2.44
3029672	25HBS336(A,G)60	CNRV*3621A**	58PH*110−20	34200	11.0	13.25	35000	3.52	8.0	20200	2.44
3029700	25HBS336(A,G)60	CNRV*4221A**	58CV(A,X)110−20	34600	11.2	13.50	34200	3.58	8.1	20200	2.48
3123284	25HBS336(A,G)60	CNRV*4221A**	58MEB100−20	34600	11.2	13.25	34200	3.54	8.1	20200	2.46
3029697	25HBS336(A,G)60	CNRV*4221A**	58MV(B,C)080−14	34400	11.0	13.20	34400	3.52	8.0	20200	2.44
3029698	25HBS336(A,G)60	CNRV*4221A**	58MV(B,C)080−20	34400	11.0	13.20	34400	3.52	8.0	20200	2.46
3029699	25HBS336(A,G)60	CNRV*4221A**	58MV(B,C)100−20	34400	11.2	13.50	34400	3.54	8.1	20200	2.46
3029673	25HBS336(A,G)60	CNRV*4221A**	58PH*090−16	34600	11.0	13.25	34200	3.52	8.0	20200	2.46
3029674	25HBS336(A,G)60	CNRV*4221A**	58PH*110−20	34800	11.0	13.50	34000	3.54	8.0	20200	2.48
3029725	25HBS336(A,G)60	CSRH*3612A**	58CV(A,X)070−12	34800	11.0	13.20	33600	3.48	8.0	20400	2.44
3029726	25HBS336(A,G)60	CSRH*3612A**	58CV(A,X)090−16	34800	11.2	13.50	33600	3.52	8.1	20200	2.48
3029727	25HBS336(A,G)60	CSRH*3612A**	58CV(A,X)110−20	35000	11.2	13.50	33400	3.52	8.1	20400	2.48
3029728	25HBS336(A,G)60	CSRH*3612A**	58CV(A,X)135−22	35000	11.2	13.50	33400	3.54	8.1	20200	2.48
3029729	25HBS336(A,G)60	CSRH*3612A**	58CV(A,X)155−22	35000	11.2	13.50	33200	3.56	8.2	20200	2.50
3123295	25HBS336(A,G)60	CSRH*3612A**	58MEB040−12	35200	11.2	13.50	32400	3.50	8.1	20400	2.48
3123296	25HBS336(A,G)60	CSRH*3612A**	58MEB060−12	35200	11.2	13.20	32000	3.46	8.1	20400	2.48
3123297	25HBS336(A,G)60	CSRH*3612A**	58MEB080−12	35000	11.2	13.20	32400	3.50	8.1	20400	2.48
3123298	25HBS336(A,G)60	CSRH*3612A**	58MEB080−16	35200	11.2	13.20	32200	3.46	8.1	20400	2.48
3123299	25HBS336(A,G)60	CSRH*3612A**	58MEB100−20	35000	11.3	13.50	32200	3.56	8.1	20200	2.50
3029719	25HBS336(A,G)60	CSRH*3612A**	58MV(B,C)040−14	34600	11.0	13.20	33800	3.48	8.0	20400	2.44
3029720	25HBS336(A,G)60	CSRH*3612A**	58MV(B,C)060−14	34800	11.0	13.20	33600	3.52	8.1	20400	2.46
3029721	25HBS336(A,G)60	CSRH*3612A**	58MV(B,C)080−14	34600	10.8	13.00	33800	3.48	8.0	20400	2.44
3029722	25HBS336(A,G)60	CSRH*3612A**	58MV(B,C)080−20	34800	11.0	13.20	33600	3.50	8.0	20400	2.46
3029723	25HBS336(A,G)60	CSRH*3612A**	58MV(B,C)100−20	34800	11.0	13.20	33600	3.50	8.1	20400	2.46
3029724	25HBS336(A,G)60	CSRH*3612A**	58MV(B,C)120−20	34800	11.0	13.20	33600	3.52	8.1	20200	2.46
3029679	25HBS336(A,G)60	CSRH*3612A**	58PH*070−16	34800	11.0	13.00	33200	3.44	8.0	20600	2.44
3029736	25HBS336(A,G)60	CSRH*4212A**	58CV(A,X)070−12	35000	11.0	13.20	32200	3.44	8.0	20400	2.46
3029737	25HBS336(A,G)60	CSRH*4212A**	58CV(A,X)090−16	35200	11.2	13.50	32000	3.48	8.1	20200	2.50
3029738	25HBS336(A,G)60	CSRH*4212A**	58CV(A,X)110−20	35200	11.2	13.50	31800	3.48	8.1	20400	2.50
3029739	25HBS336(A,G)60	CSRH*4212A**	58CV(A,X)135−22	35200	11.2	13.50	32000	3.50	8.1	20200	2.50
3029740	25HBS336(A,G)60	CSRH*4212A**	58CV(A,X)155−22	35200	11.2	13.50	31800	3.50	8.2	20200	2.52
3123300	25HBS336(A,G)60	CSRH*4212A**	58MEB060−12	35600	11.2	13.50	30400	3.40	8.1	20400	2.50
3123301	25HBS336(A,G)60	CSRH*4212A**	58MEB080−12	35400	11.3	13.50	30800	3.44	8.1	20400	2.50
3123302	25HBS336(A,G)60	CSRH*4212A**	58MEB080−16	35400	11.2	13.50	30600	3.40	8.1	20400	2.50
3123303	25HBS336(A,G)60	CSRH*4212A**	58MEB100−20	35400	11.4	13.50	31400	3.50	8.1	20200	2.52
3029730	25HBS336(A,G)60	CSRH*4212A**	58MV(B,C)040−14	35000	11.0	13.20	32400	3.44	8.0	20400	2.46
3029731	25HBS336(A,G)60	CSRH*4212A**	58MV(B,C)060−14	35000	11.2	13.50	32200	3.48	8.1	20400	2.48

See notes on page 31

COMBINATION RATINGS CONTINUED

ARI Ref. No.	Model Number	Coil Model Number	Furnace Model Number	Cooling Capacity	EER	SEER	High Temp		HSPF	Low Temp	
							E Capacity	E COP		H Capacity	H COP
3029732	25HBS336(A,G)60	CSRH*4212A**	58MV(B,C)080−14	34800	11.0	13.20	32400	3.44	8.0	20400	2.44
3029733	25HBS336(A,G)60	CSRH*4212A**	58MV(B,C)080−20	35000	11.2	13.50	32200	3.46	8.0	20400	2.48
3029734	25HBS336(A,G)60	CSRH*4212A**	58MV(B,C)100−20	35000	11.2	13.50	32000	3.46	8.1	20400	2.48
3029735	25HBS336(A,G)60	CSRH*4212A**	58MV(B,C)120−20	35000	11.2	13.50	32400	3.48	8.1	20400	2.48
3029744	25HBS342(A,G)30	†FC4DN(F,B)042		41000	10.8	13.00	41000	3.50	8.0	24600	2.44
3029841	25HBS342(A,G)30	FC4DN(F,B)048		42000	11.2	13.50	38500	3.48	8.2	24600	2.50
3029842	25HBS342(A,G)30	FK4DN(B,F)003		39500	11.0	13.20	42000	3.46	7.8	24000	2.42
3029843	25HBS342(A,G)30	FK4DN(B,F)005		41500	11.2	13.50	37200	3.42	8.2	24000	2.50
3029770	25HBS342(A,G)30	CAR**4221A**	58CV(A,X)110−20	39500	11.0	13.20	42000	3.50	8.0	24000	2.42
3111376	25HBS342(A,G)30	CAR**4221A**	58MEB100−20	40000	11.0	13.25	41500	3.54	8.1	24000	2.44
3029768	25HBS342(A,G)30	CAR**4221A**	58MV(B,C)080−20	39500	10.8	13.00	42000	3.46	7.8	24200	2.40
3029769	25HBS342(A,G)30	CAR**4221A**	58MV(B,C)100−20	39500	10.8	13.00	42000	3.48	8.0	24000	2.40
3029745	25HBS342(A,G)30	CAR**4221A**	58PH*090−16	40000	11.0	13.25	42000	3.52	8.0	24000	2.42
3029746	25HBS342(A,G)30	CAR**4221A**	58PH*110−20	40000	11.0	13.25	41500	3.54	8.0	24000	2.44
3029773	25HBS342(A,G)30	CAR**4224A**	58CV(A,X)135−22	39500	11.0	13.20	41500	3.52	8.0	23800	2.44
3029774	25HBS342(A,G)30	CAR**4224A**	58CV(A,X)155−22	39500	11.2	13.50	41500	3.52	8.0	23800	2.44
3111377	25HBS342(A,G)30	CAR**4224A**	58MEB120−20	40000	11.0	13.50	41500	3.56	8.1	24000	2.46
3029771	25HBS342(A,G)30	CAR**4224A**	58MV(B,C)040−14	39500	10.8	13.00	42000	3.44	7.8	24200	2.38
3029772	25HBS342(A,G)30	CAR**4224A**	58MV(B,C)120−20	39500	11.0	13.20	42000	3.48	8.0	24000	2.42
3029747	25HBS342(A,G)30	CAR**4224A**	58PH*135−20	40000	11.0	13.25	41500	3.52	8.0	24000	2.44
3029776	25HBS342(A,G)30	CAR**4817A**	58CV(A,X)090−16	40500	11.0	13.20	39000	3.48	8.1	24200	2.46
3111378	25HBS342(A,G)30	CAR**4817A**	58MEB040−12	41000	11.0	13.20	39000	3.48	8.1	24400	2.46
3111379	25HBS342(A,G)30	CAR**4817A**	58MEB060−12	41000	11.0	13.20	39000	3.46	8.1	24400	2.46
3111380	25HBS342(A,G)30	CAR**4817A**	58MEB080−12	41000	11.0	13.25	39000	3.48	8.1	24400	2.46
3111381	25HBS342(A,G)30	CAR**4817A**	58MEB080−16	41000	11.0	13.25	39000	3.48	8.1	24400	2.46
3029775	25HBS342(A,G)30	CAR**4817A**	58MV(B,C)060−14	40500	11.0	13.20	39500	3.46	8.0	24400	2.44
3029780	25HBS342(A,G)30	CAR**4821A**	58CV(A,X)110−20	40500	11.0	13.20	40000	3.52	8.1	24200	2.46
3111382	25HBS342(A,G)30	CAR**4821A**	58MEB100−20	40500	11.2	13.50	39500	3.54	8.1	24200	2.48
3029777	25HBS342(A,G)30	CAR**4821A**	58MV(B,C)080−14	40000	10.8	13.00	40500	3.44	8.0	24400	2.40
3029778	25HBS342(A,G)30	CAR**4821A**	58MV(B,C)080−20	40000	11.0	13.20	40000	3.46	8.0	24200	2.42
3029779	25HBS342(A,G)30	CAR**4821A**	58MV(B,C)100−20	40000	11.0	13.20	40000	3.48	8.0	24200	2.44
3029748	25HBS342(A,G)30	CAR**4821A**	58PH*090−16	40500	11.0	13.50	40000	3.52	8.2	24200	2.46
3029749	25HBS342(A,G)30	CAR**4821A**	58PH*110−20	40500	11.0	13.50	39500	3.54	8.2	24200	2.48
3029783	25HBS342(A,G)30	CAR**4824A**	58CV(A,X)135−22	40500	11.2	13.50	40000	3.54	8.2	24000	2.48
3029784	25HBS342(A,G)30	CAR**4824A**	58CV(A,X)155−22	40500	11.2	13.50	40000	3.54	8.2	24000	2.48
3111383	25HBS342(A,G)30	CAR**4824A**	58MEB120−20	41000	11.2	13.50	39500	3.56	8.2	24200	2.50
3029781	25HBS342(A,G)30	CAR**4824A**	58MV(B,C)040−14	40000	10.8	13.00	40500	3.46	8.0	24200	2.42
3029782	25HBS342(A,G)30	CAR**4824A**	58MV(B,C)120−20	40000	11.0	13.20	40000	3.50	8.0	24000	2.44
3029750	25HBS342(A,G)30	CAR**4824A**	58PH*135−20	40500	11.0	13.50	40000	3.54	8.2	24200	2.48
3029803	25HBS342(A,G)30	CNRH*4221A**	58CV(A,X)070−12	39500	10.8	13.00	42000	3.46	7.9	24200	2.40
3029804	25HBS342(A,G)30	CNRH*4221A**	58CV(A,X)090−16	39500	11.0	13.20	41500	3.52	8.0	24000	2.44
3029805	25HBS342(A,G)30	CNRH*4221A**	58CV(A,X)110−20	40000	11.2	13.50	41500	3.56	8.0	23800	2.46
3029806	25HBS342(A,G)30	CNRH*4221A**	58CV(A,X)135−22	40000	11.2	13.50	41500	3.56	8.0	23800	2.48
3029807	25HBS342(A,G)30	CNRH*4221A**	58CV(A,X)155−22	40000	11.2	13.50	41500	3.56	8.0	23800	2.48
3111387	25HBS342(A,G)30	CNRH*4221A**	58MEB040−12	40000	10.7	13.00	42000	3.50	8.0	24400	2.42
3111388	25HBS342(A,G)30	CNRH*4221A**	58MEB060−12	40000	10.7	13.00	42000	3.48	8.0	24400	2.40
3111389	25HBS342(A,G)30	CNRH*4221A**	58MEB080−12	40000	10.8	13.00	42000	3.50	8.0	24200	2.42
3111390	25HBS342(A,G)30	CNRH*4221A**	58MEB080−16	39500	10.8	13.00	42000	3.48	8.0	24200	2.40
3111391	25HBS342(A,G)30	CNRH*4221A**	58MEB100−20	40000	11.0	13.20	42000	3.52	8.1	24000	2.44
3111392	25HBS342(A,G)30	CNRH*4221A**	58MEB120−20	40000	11.0	13.25	42000	3.54	8.1	24000	2.44
3029797	25HBS342(A,G)30	CNRH*4221A**	58MV(B,C)040−14	39500	10.8	13.00	42000	3.48	8.0	24000	2.40
3029798	25HBS342(A,G)30	CNRH*4221A**	58MV(B,C)060−14	39500	11.0	13.20	42000	3.50	8.0	24000	2.42
3029799	25HBS342(A,G)30	CNRH*4221A**	58MV(B,C)080−14	39500	10.8	13.00	42000	3.46	7.8	24000	2.40
3029800	25HBS342(A,G)30	CNRH*4221A**	58MV(B,C)080−20	39500	11.0	13.20	42000	3.50	8.0	24000	2.42
3029801	25HBS342(A,G)30	CNRH*4221A**	58MV(B,C)100−20	39500	11.0	13.20	42000	3.52	8.0	24000	2.44
3029802	25HBS342(A,G)30	CNRH*4221A**	58MV(B,C)120−20	39500	11.0	13.20	41500	3.52	8.0	23800	2.44
3029756	25HBS342(A,G)30	CNRH*4221A**	58PH*090−16	39500	11.0	13.25	42000	3.50	8.0	24000	2.42
3029757	25HBS342(A,G)30	CNRH*4221A**	58PH*110−20	40000	11.0	13.25	42000	3.50	8.0	24000	2.42
3029758	25HBS342(A,G)30	CNRH*4221A**	58PH*135−20	39500	11.0	13.25	42000	3.50	8.0	24000	2.42
3029814	25HBS342(A,G)30	CNRH*4821A**	58CV(A,X)070−12	40000	10.8	13.00	41500	3.50	8.0	24400	2.42
3029815	25HBS342(A,G)30	CNRH*4821A**	58CV(A,X)090−16	40500	11.2	13.50	41000	3.56	8.1	24000	2.46
3029816	25HBS342(A,G)30	CNRH*4821A**	58CV(A,X)110−20	40500	11.2	13.50	41000	3.58	8.2	24000	2.46
3029817	25HBS342(A,G)30	CNRH*4821A**	58CV(A,X)135−22	40500	11.2	13.50	41000	3.60	8.2	24000	2.48
3029818	25HBS342(A,G)30	CNRH*4821A**	58CV(A,X)155−22	40500	11.2	13.50	41000	3.60	8.2	24000	2.48
3111393	25HBS342(A,G)30	CNRH*4821A**	58MEB040−12	41000	11.0	13.20	41000	3.56	8.2	24400	2.46
3111394	25HBS342(A,G)30	CNRH*4821A**	58MEB060−12	41000	11.0	13.20	41000	3.54	8.2	24400	2.46
3111395	25HBS342(A,G)30	CNRH*4821A**	58MEB080−12	41000	11.0	13.25	41000	3.56	8.2	24400	2.46
3111396	25HBS342(A,G)30	CNRH*4821A**	58MEB080−16	40500	11.0	13.25	41000	3.56	8.2	24200	2.46
3111397	25HBS342(A,G)30	CNRH*4821A**	58MEB100−20	41000	11.1	13.50	40500	3.60	8.3	24200	2.48
3111398	25HBS342(A,G)30	CNRH*4821A**	58MEB120−20	41000	11.2	13.50	40500	3.62	8.3	24200	2.50
3029808	25HBS342(A,G)30	CNRH*4821A**	58MV(B,C)040−14	40000	10.8	13.00	41500	3.50	8.0	24200	2.42
3029809	25HBS342(A,G)30	CNRH*4821A**	58MV(B,C)060−14	40500	11.0	13.20	41000	3.54	8.0	24200	2.44
3029810	25HBS342(A,G)30	CNRH*4821A**	58MV(B,C)080−14	40000	10.8	13.00	41500	3.50	8.0	24400	2.42
3029811	25HBS342(A,G)30	CNRH*4821A**	58MV(B,C)080−20	40500	11.0	13.20	41000	3.52	8.0	24200	2.44
3029812	25HBS342(A,G)30	CNRH*4821A**	58MV(B,C)100−20	40500	11.0	13.20	41000	3.56	8.1	24200	2.46
3029813	25HBS342(A,G)30	CNRH*4821A**	58MV(B,C)120−20	40500	11.0	13.20	41000	3.56	8.1	24000	2.46
3029759	25HBS342(A,G)30	CNRH*4821A**	58PH*090−16	40500	11.0	13.50	40500	3.58	8.2	24200	2.48
3029760	25HBS342(A,G)30	CNRH*4821A**	58PH*110−20	41000	11.0	13.50	40500	3.60	8.2	24200	2.48
3029761	25HBS342(A,G)30	CNRH*4821A**	58PH*135−20	41000	11.0	13.50	40500	3.58	8.2	24200	2.48
3029788	25HBS342(A,G)30	CNRV*4221A**	58CV(A,X)110−20	40000	11.2	13.50	41500	3.56	8.0	23800	2.46
3111384	25HBS342(A,G)30	CNRV*4221A**	58MEB100−20	40000	11.0	13.20	42000	3.52	8.1	24000	2.44
3029785	25HBS342(A,G)30	CNRV*4221A**	58MV(B,C)080−14	39500	10.8	13.00	42000	3.46	7.8	24000	2.40
3029786	25HBS342(A,G)30	CNRV*4221A**	58MV(B,C)080−20	39500	11.0	13.20	42000	3.50	8.0	24000	2.42
3029787	25HBS342(A,G)30	CNRV*4221A**	58MV(B,C)100−20	39500	11.0	13.20	42000	3.52	8.0	24000	2.44
3029751	25HBS342(A,G)30	CNRV*4221A**	58PH*090−16	39500	11.0	13.25	42000	3.50	8.0	24000	2.42
3029752	25HBS342(A,G)30	CNRV*4221A**	58PH*110−20	40000	11.0	13.25	42000	3.50	8.0	24000	2.42

See notes on page 31

COMBINATION RATINGS CONTINUED

ARI Ref. No.	Model Number	Coil Model Number	Furnace Model Number	Cooling Capacity	EER	SEER	High Temp		HSPF	Low Temp	
							E Capacity	E COP		H Capacity	H COP
3029792	25HBS342(A,G)30	CNRV*4821A**	58CV(A,X)110–20	40500	11.2	13.50	41000	3.58	8.2	24000	2.46
3111385	25HBS342(A,G)30	CNRV*4821A**	58MEB100–20	41000	11.2	13.50	40500	3.60	8.2	24200	2.48
3029789	25HBS342(A,G)30	CNRV*4821A**	58MV(B,C)080–14	40000	10.8	13.00	41500	3.50	8.0	24200	2.42
3029790	25HBS342(A,G)30	CNRV*4821A**	58MV(B,C)080–20	40500	11.0	13.20	41000	3.52	8.0	24200	2.44
3029791	25HBS342(A,G)30	CNRV*4821A**	58MV(B,C)100–20	40500	11.0	13.20	41000	3.54	8.0	24200	2.46
3029753	25HBS342(A,G)30	CNRV*4821A**	58PH*090–16	40500	11.0	13.50	41000	3.58	8.2	24200	2.48
3029754	25HBS342(A,G)30	CNRV*4821A**	58PH*110–20	41000	11.0	13.50	40500	3.60	8.2	24200	2.48
3029795	25HBS342(A,G)30	CNRV*4824A**	58CV(A,X)135–22	40500	11.2	13.50	41000	3.60	8.2	24000	2.48
3029796	25HBS342(A,G)30	CNRV*4824A**	58CV(A,X)155–22	40500	11.2	13.50	41000	3.60	8.2	24000	2.48
3111386	25HBS342(A,G)30	CNRV*4824A**	58MEB120–20	41000	11.3	13.50	40500	3.62	8.3	24200	2.50
3029793	25HBS342(A,G)30	CNRV*4824A**	58MV(B,C)040–14	40000	10.8	13.00	41500	3.50	8.0	24200	2.42
3029794	25HBS342(A,G)30	CNRV*4824A**	58MV(B,C)120–20	40500	11.0	13.20	41000	3.56	8.1	24000	2.46
3029755	25HBS342(A,G)30	CNRV*4824A**	58PH*135–20	41000	11.0	13.50	40500	3.58	8.2	24200	2.48
3029825	25HBS342(A,G)30	CSRH*4212A**	58CV(A,X)070–12	40500	10.8	13.00	41500	3.50	8.0	24400	2.42
3029826	25HBS342(A,G)30	CSRH*4212A**	58CV(A,X)090–16	40500	11.0	13.20	41000	3.56	8.1	24200	2.46
3029827	25HBS342(A,G)30	CSRH*4212A**	58CV(A,X)110–20	40500	11.0	13.20	41000	3.56	8.2	24200	2.46
3029828	25HBS342(A,G)30	CSRH*4212A**	58CV(A,X)135–22	40500	11.2	13.50	41000	3.58	8.2	24000	2.48
3029829	25HBS342(A,G)30	CSRH*4212A**	58CV(A,X)155–22	40500	11.2	13.50	41000	3.60	8.2	24000	2.48
3111399	25HBS342(A,G)30	CSRH*4212A**	58MEB040–12	41000	11.0	13.20	41000	3.56	8.3	24400	2.46
3111400	25HBS342(A,G)30	CSRH*4212A**	58MEB060–12	41000	11.0	13.20	41000	3.54	8.1	24400	2.44
3111401	25HBS342(A,G)30	CSRH*4212A**	58MEB080–12	41000	11.0	13.25	41000	3.56	8.2	24400	2.46
3111402	25HBS342(A,G)30	CSRH*4212A**	58MEB080–16	40500	11.0	13.25	41000	3.56	8.1	24200	2.44
3111403	25HBS342(A,G)30	CSRH*4212A**	58MEB100–20	41000	11.2	13.50	41000	3.60	8.3	24200	2.48
3111404	25HBS342(A,G)30	CSRH*4212A**	58MEB120–20	41000	11.2	13.50	41000	3.60	8.3	24200	2.48
3029819	25HBS342(A,G)30	CSRH*4212A**	58MV(B,C)040–14	40000	10.8	13.00	41500	3.50	8.0	24400	2.42
3029820	25HBS342(A,G)30	CSRH*4212A**	58MV(B,C)060–14	40500	11.0	13.20	41000	3.52	8.0	24200	2.44
3029821	25HBS342(A,G)30	CSRH*4212A**	58MV(B,C)080–14	40000	10.8	13.00	41500	3.48	8.0	24400	2.40
3029822	25HBS342(A,G)30	CSRH*4212A**	58MV(B,C)080–20	40500	11.0	13.20	41000	3.52	8.0	24400	2.42
3029823	25HBS342(A,G)30	CSRH*4212A**	58MV(B,C)100–20	40500	11.0	13.20	41000	3.54	8.0	24200	2.44
3029824	25HBS342(A,G)30	CSRH*4212A**	58MV(B,C)120–20	40500	11.0	13.20	41000	3.54	8.0	24200	2.44
3029762	25HBS342(A,G)30	CSRH*4212A**	58PH*090–16	41000	11.0	13.50	41000	3.58	8.2	24200	2.46
3029763	25HBS342(A,G)30	CSRH*4212A**	58PH*110–20	41000	11.0	13.50	41000	3.58	8.2	24200	2.48
3029764	25HBS342(A,G)30	CSRH*4212A**	58PH*135–20	41000	11.0	13.50	41000	3.58	8.2	24200	2.46
3029836	25HBS342(A,G)30	CSRH*4812A**	58CV(A,X)070–12	40500	10.8	13.00	41000	3.50	8.0	24400	2.42
3029837	25HBS342(A,G)30	CSRH*4812A**	58CV(A,X)090–16	40500	11.2	13.50	41000	3.56	8.2	24200	2.46
3029838	25HBS342(A,G)30	CSRH*4812A**	58CV(A,X)110–20	41000	11.2	13.50	40500	3.56	8.2	24200	2.46
3029839	25HBS342(A,G)30	CSRH*4812A**	58CV(A,X)135–22	41000	11.2	13.50	40500	3.60	8.2	24000	2.48
3029840	25HBS342(A,G)30	CSRH*4812A**	58CV(A,X)155–22	41000	11.2	13.50	40500	3.60	8.2	24000	2.48
3111405	25HBS342(A,G)30	CSRH*4812A**	58MEB040–12	41000	11.0	13.25	40500	3.56	8.2	24400	2.46
3111406	25HBS342(A,G)30	CSRH*4812A**	58MEB060–12	41000	11.0	13.20	40500	3.54	8.2	24400	2.46
3111407	25HBS342(A,G)30	CSRH*4812A**	58MEB080–12	41000	11.0	13.50	40500	3.56	8.2	24400	2.46
3111408	25HBS342(A,G)30	CSRH*4812A**	58MEB080–16	41000	11.0	13.50	40500	3.56	8.2	24400	2.46
3111409	25HBS342(A,G)30	CSRH*4812A**	58MEB100–20	41000	11.2	13.50	40500	3.60	8.3	24200	2.48
3111410	25HBS342(A,G)30	CSRH*4812A**	58MEB120–20	41000	11.2	13.50	40500	3.62	8.3	24200	2.50
3029830	25HBS342(A,G)30	CSRH*4812A**	58MV(B,C)040–14	40500	10.8	13.00	41000	3.50	8.0	24400	2.42
3029831	25HBS342(A,G)30	CSRH*4812A**	58MV(B,C)060–14	40500	11.0	13.20	41000	3.54	8.0	24200	2.44
3029832	25HBS342(A,G)30	CSRH*4812A**	58MV(B,C)080–14	40500	10.8	13.00	41000	3.50	8.0	24400	2.42
3029833	25HBS342(A,G)30	CSRH*4812A**	58MV(B,C)080–20	40500	11.0	13.20	41000	3.52	8.0	24400	2.44
3029834	25HBS342(A,G)30	CSRH*4812A**	58MV(B,C)100–20	40500	11.0	13.20	41000	3.54	8.0	24200	2.44
3029835	25HBS342(A,G)30	CSRH*4812A**	58MV(B,C)120–20	40500	11.0	13.20	41000	3.54	8.1	24200	2.46
3029765	25HBS342(A,G)30	CSRH*4812A**	58PH*090–16	41000	11.0	13.50	40500	3.58	8.2	24200	2.48
3029766	25HBS342(A,G)30	CSRH*4812A**	58PH*110–20	41000	11.0	13.50	40500	3.58	8.2	24200	2.48
3029767	25HBS342(A,G)30	CSRH*4812A**	58PH*135–20	41000	11.0	13.50	40500	3.58	8.2	24200	2.48
3029844	25HBS342(A,G)50	†FC4DN(F,B)042		41000	10.8	13.00	41000	3.50	8.0	24600	2.44
3029941	25HBS342(A,G)50	FC4DN(F,B)048		42000	11.2	13.50	38500	3.48	8.2	24600	2.50
3029942	25HBS342(A,G)50	FK4DN(B,F)003		39500	11.0	13.20	42000	3.46	7.8	24000	2.42
3029943	25HBS342(A,G)50	FK4DN(B,F)005		41500	11.2	13.50	37200	3.42	8.2	24000	2.50
3029870	25HBS342(A,G)50	CAR**4221A**	58CV(A,X)110–20	39500	11.0	13.20	42000	3.50	8.0	24000	2.42
3123205	25HBS342(A,G)50	CAR**4221A**	58MEB100–20	40000	11.0	13.25	41500	3.54	8.1	24000	2.44
3029868	25HBS342(A,G)50	CAR**4221A**	58MV(B,C)080–20	39500	10.8	13.00	42000	3.46	7.8	24200	2.40
3029869	25HBS342(A,G)50	CAR**4221A**	58MV(B,C)100–20	39500	10.8	13.00	42000	3.48	8.0	24000	2.40
3029845	25HBS342(A,G)50	CAR**4221A**	58PH*090–16	40000	11.0	13.25	42000	3.52	8.0	24000	2.42
3029846	25HBS342(A,G)50	CAR**4221A**	58PH*110–20	40000	11.0	13.25	41500	3.54	8.0	24000	2.44
3029873	25HBS342(A,G)50	CAR**4224A**	58CV(A,X)135–22	39500	11.0	13.20	41500	3.52	8.0	23800	2.44
3029874	25HBS342(A,G)50	CAR**4224A**	58CV(A,X)155–22	39500	11.2	13.50	41500	3.52	8.0	23800	2.44
3123206	25HBS342(A,G)50	CAR**4224A**	58MEB120–20	40000	11.0	13.50	41500	3.56	8.1	24000	2.46
3029871	25HBS342(A,G)50	CAR**4224A**	58MV(B,C)040–14	39500	10.8	13.00	42000	3.44	7.8	24200	2.38
3029872	25HBS342(A,G)50	CAR**4224A**	58MV(B,C)120–20	39500	11.0	13.20	42000	3.48	8.0	24000	2.42
3029847	25HBS342(A,G)50	CAR**4224A**	58PH*135–20	40000	11.0	13.25	41500	3.52	8.0	24000	2.44
3029876	25HBS342(A,G)50	CAR**4817A**	58CV(A,X)090–16	40500	11.0	13.20	39000	3.48	8.1	24200	2.46
3123207	25HBS342(A,G)50	CAR**4817A**	58MEB040–12	41000	11.0	13.20	39000	3.48	8.1	24400	2.46
3123208	25HBS342(A,G)50	CAR**4817A**	58MEB060–12	41000	11.0	13.20	39000	3.46	8.1	24400	2.46
3123209	25HBS342(A,G)50	CAR**4817A**	58MEB080–12	41000	11.0	13.25	39000	3.48	8.1	24400	2.46
3123210	25HBS342(A,G)50	CAR**4817A**	58MEB080–16	41000	11.0	13.25	39000	3.48	8.1	24400	2.46
3029875	25HBS342(A,G)50	CAR**4817A**	58MV(B,C)060–14	40500	11.0	13.20	39500	3.46	8.0	24400	2.44
3029880	25HBS342(A,G)50	CAR**4821A**	58CV(A,X)110–20	40500	11.0	13.20	40000	3.52	8.1	24200	2.46
3123211	25HBS342(A,G)50	CAR**4821A**	58MEB100–20	40500	11.2	13.50	39500	3.54	8.1	24200	2.48
3029877	25HBS342(A,G)50	CAR**4821A**	58MV(B,C)080–14	40000	10.8	13.00	40500	3.44	8.0	24400	2.40
3029878	25HBS342(A,G)50	CAR**4821A**	58MV(B,C)080–20	40000	11.0	13.20	40000	3.46	8.0	24200	2.42
3029879	25HBS342(A,G)50	CAR**4821A**	58MV(B,C)100–20	40000	11.0	13.20	40000	3.48	8.0	24200	2.44
3029848	25HBS342(A,G)50	CAR**4821A**	58PH*090–16	40500	11.0	13.50	40000	3.52	8.2	24200	2.46
3029849	25HBS342(A,G)50	CAR**4821A**	58PH*110–20	40500	11.0	13.50	39500	3.54	8.2	24200	2.48
3029883	25HBS342(A,G)50	CAR**4824A**	58CV(A,X)135–22	40500	11.2	13.50	40000	3.54	8.2	24000	2.48
3029884	25HBS342(A,G)50	CAR**4824A**	58CV(A,X)155–22	40500	11.2	13.50	40000	3.54	8.2	24000	2.48
3123212	25HBS342(A,G)50	CAR**4824A**	58MEB120–20	41000	11.2	13.50	39500	3.56	8.2	24200	2.50
3029881	25HBS342(A,G)50	CAR**4824A**	58MV(B,C)040–14	40000	10.8	13.00	40500	3.46	8.0	24200	2.42

See notes on page 31

COMBINATION RATINGS CONTINUED

ARI Ref. No.	Model Number	Coil Model Number	Furnace Model Number	Cooling Capacity	EER	SEER	High Temp		HSPF	Low Temp	
							E Capacity	E COP		H Capacity	H COP
3029882	25HBS342(A,G)50	CAR**4824A**	58MV(B,C)120−20	40000	11.0	13.20	40000	3.50	8.0	24000	2.44
3029850	25HBS342(A,G)50	CAR**4824A**	58PH*135−20	40500	11.0	13.50	40000	3.54	8.2	24200	2.48
3029903	25HBS342(A,G)50	CNRH*4221A**	58CV(A,X)070−12	39500	10.8	13.00	42000	3.46	7.9	24200	2.40
3029904	25HBS342(A,G)50	CNRH*4221A**	58CV(A,X)090−16	39500	11.0	13.20	41500	3.52	8.0	24000	2.44
3029905	25HBS342(A,G)50	CNRH*4221A**	58CV(A,X)110−20	40000	11.2	13.50	41500	3.56	8.0	23800	2.46
3029906	25HBS342(A,G)50	CNRH*4221A**	58CV(A,X)135−22	40000	11.2	13.50	41500	3.56	8.0	23800	2.48
3029907	25HBS342(A,G)50	CNRH*4221A**	58CV(A,X)155−22	40000	11.2	13.50	41500	3.56	8.0	23800	2.48
3123216	25HBS342(A,G)50	CNRH*4221A**	58MEB040−12	40000	10.7	13.00	42000	3.50	8.0	24400	2.42
3123217	25HBS342(A,G)50	CNRH*4221A**	58MEB060−12	40000	10.7	13.00	42000	3.48	8.0	24400	2.40
3123218	25HBS342(A,G)50	CNRH*4221A**	58MEB080−12	40000	10.8	13.00	42000	3.50	8.0	24200	2.42
3123219	25HBS342(A,G)50	CNRH*4221A**	58MEB080−16	39500	10.8	13.00	42000	3.48	8.0	24200	2.40
3123220	25HBS342(A,G)50	CNRH*4221A**	58MEB100−20	40000	11.0	13.20	42000	3.52	8.1	24000	2.44
3123221	25HBS342(A,G)50	CNRH*4221A**	58MEB120−20	40000	11.0	13.25	42000	3.54	8.1	24000	2.44
3029897	25HBS342(A,G)50	CNRH*4221A**	58MV(B,C)040−14	39500	10.8	13.00	42000	3.48	8.0	24000	2.40
3029898	25HBS342(A,G)50	CNRH*4221A**	58MV(B,C)060−14	39500	11.0	13.20	42000	3.50	8.0	24000	2.42
3029899	25HBS342(A,G)50	CNRH*4221A**	58MV(B,C)080−14	39500	10.8	13.00	42000	3.46	7.8	24000	2.40
3029900	25HBS342(A,G)50	CNRH*4221A**	58MV(B,C)080−20	39500	11.0	13.20	42000	3.50	8.0	24000	2.42
3029901	25HBS342(A,G)50	CNRH*4221A**	58MV(B,C)100−20	39500	11.0	13.20	42000	3.52	8.0	24000	2.44
3029902	25HBS342(A,G)50	CNRH*4221A**	58MV(B,C)120−20	39500	11.0	13.20	41500	3.52	8.0	23800	2.44
3029856	25HBS342(A,G)50	CNRH*4221A**	58PH*090−16	39500	11.0	13.25	42000	3.50	8.0	24000	2.42
3029857	25HBS342(A,G)50	CNRH*4221A**	58PH*110−20	40000	11.0	13.25	42000	3.50	8.0	24000	2.42
3029858	25HBS342(A,G)50	CNRH*4221A**	58PH*135−20	39500	11.0	13.25	42000	3.50	8.0	24000	2.42
3029914	25HBS342(A,G)50	CNRH*4821A**	58CV(A,X)070−12	40000	10.8	13.00	41500	3.50	8.0	24400	2.42
3029915	25HBS342(A,G)50	CNRH*4821A**	58CV(A,X)090−16	40500	11.2	13.50	41000	3.56	8.1	24000	2.46
3029916	25HBS342(A,G)50	CNRH*4821A**	58CV(A,X)110−20	40500	11.2	13.50	41000	3.58	8.2	24000	2.46
3029917	25HBS342(A,G)50	CNRH*4821A**	58CV(A,X)135−22	40500	11.2	13.50	41000	3.60	8.2	24000	2.48
3029918	25HBS342(A,G)50	CNRH*4821A**	58CV(A,X)155−22	40500	11.2	13.50	41000	3.60	8.2	24000	2.48
3123222	25HBS342(A,G)50	CNRH*4821A**	58MEB040−12	41000	11.0	13.20	41000	3.56	8.2	24400	2.46
3123223	25HBS342(A,G)50	CNRH*4821A**	58MEB060−12	41000	11.0	13.20	41000	3.54	8.2	24400	2.46
3123224	25HBS342(A,G)50	CNRH*4821A**	58MEB080−12	41000	11.0	13.25	41000	3.56	8.2	24400	2.46
3123225	25HBS342(A,G)50	CNRH*4821A**	58MEB080−16	40500	11.0	13.25	41000	3.56	8.2	24200	2.46
3123226	25HBS342(A,G)50	CNRH*4821A**	58MEB100−20	41000	11.1	13.50	40500	3.60	8.3	24200	2.48
3123227	25HBS342(A,G)50	CNRH*4821A**	58MEB120−20	41000	11.2	13.50	40500	3.62	8.3	24200	2.50
3029908	25HBS342(A,G)50	CNRH*4821A**	58MV(B,C)040−14	40000	10.8	13.00	41500	3.50	8.0	24200	2.42
3029909	25HBS342(A,G)50	CNRH*4821A**	58MV(B,C)060−14	40500	11.0	13.20	41000	3.54	8.0	24200	2.44
3029910	25HBS342(A,G)50	CNRH*4821A**	58MV(B,C)080−14	40000	10.8	13.00	41500	3.50	8.0	24400	2.42
3029911	25HBS342(A,G)50	CNRH*4821A**	58MV(B,C)080−20	40500	11.0	13.20	41000	3.52	8.0	24200	2.44
3029912	25HBS342(A,G)50	CNRH*4821A**	58MV(B,C)100−20	40500	11.0	13.20	41000	3.56	8.1	24200	2.46
3029913	25HBS342(A,G)50	CNRH*4821A**	58MV(B,C)120−20	40500	11.0	13.20	41000	3.56	8.1	24000	2.46
3029859	25HBS342(A,G)50	CNRH*4821A**	58PH*090−16	40500	11.0	13.50	40500	3.58	8.2	24200	2.48
3029860	25HBS342(A,G)50	CNRH*4821A**	58PH*110−20	41000	11.0	13.50	40500	3.60	8.2	24200	2.48
3029861	25HBS342(A,G)50	CNRH*4821A**	58PH*135−20	41000	11.0	13.50	40500	3.58	8.2	24200	2.48
3029888	25HBS342(A,G)50	CNRV*4221A**	58CV(A,X)110−20	40000	11.2	13.50	41500	3.56	8.0	23800	2.46
3123213	25HBS342(A,G)50	CNRV*4221A**	58MEB100−20	40000	11.0	13.20	42000	3.52	8.1	24000	2.44
3029885	25HBS342(A,G)50	CNRV*4221A**	58MV(B,C)080−14	39500	10.8	13.00	42000	3.46	7.8	24000	2.40
3029886	25HBS342(A,G)50	CNRV*4221A**	58MV(B,C)080−20	39500	11.0	13.20	42000	3.50	8.0	24000	2.42
3029887	25HBS342(A,G)50	CNRV*4221A**	58MV(B,C)100−20	39500	11.0	13.20	42000	3.52	8.0	24000	2.44
3029851	25HBS342(A,G)50	CNRV*4221A**	58PH*090−16	39500	11.0	13.25	42000	3.50	8.0	24000	2.42
3029852	25HBS342(A,G)50	CNRV*4221A**	58PH*110−20	40000	11.0	13.25	42000	3.50	8.0	24000	2.42
3029892	25HBS342(A,G)50	CNRV*4821A**	58CV(A,X)110−20	40500	11.2	13.50	41000	3.58	8.2	24000	2.46
3123214	25HBS342(A,G)50	CNRV*4821A**	58MEB100−20	41000	11.2	13.50	40500	3.60	8.2	24200	2.48
3029889	25HBS342(A,G)50	CNRV*4821A**	58MV(B,C)080−14	40000	10.8	13.00	41500	3.50	8.0	24200	2.42
3029890	25HBS342(A,G)50	CNRV*4821A**	58MV(B,C)080−20	40500	11.0	13.20	41000	3.52	8.0	24200	2.44
3029891	25HBS342(A,G)50	CNRV*4821A**	58MV(B,C)100−20	40500	11.0	13.20	41000	3.54	8.0	24200	2.46
3029853	25HBS342(A,G)50	CNRV*4821A**	58PH*090−16	40500	11.0	13.50	41000	3.58	8.2	24200	2.48
3029854	25HBS342(A,G)50	CNRV*4821A**	58PH*110−20	41000	11.0	13.50	40500	3.60	8.2	24200	2.48
3029895	25HBS342(A,G)50	CNRV*4824A**	58CV(A,X)135−22	40500	11.2	13.50	41000	3.60	8.2	24000	2.48
3029896	25HBS342(A,G)50	CNRV*4824A**	58CV(A,X)155−22	40500	11.2	13.50	41000	3.60	8.2	24000	2.48
3123215	25HBS342(A,G)50	CNRV*4824A**	58MEB120−20	41000	11.3	13.50	40500	3.62	8.3	24200	2.50
3029893	25HBS342(A,G)50	CNRV*4824A**	58MV(B,C)040−14	40000	10.8	13.00	41500	3.50	8.0	24200	2.42
3029894	25HBS342(A,G)50	CNRV*4824A**	58MV(B,C)120−20	40500	11.0	13.20	41000	3.56	8.1	24000	2.46
3029855	25HBS342(A,G)50	CNRV*4824A**	58PH*135−20	41000	11.0	13.50	40500	3.58	8.2	24200	2.48
3029925	25HBS342(A,G)50	CSRH*4212A**	58CV(A,X)070−12	40500	10.8	13.00	41500	3.50	8.0	24400	2.42
3029926	25HBS342(A,G)50	CSRH*4212A**	58CV(A,X)090−16	40500	11.0	13.20	41000	3.56	8.1	24200	2.46
3029927	25HBS342(A,G)50	CSRH*4212A**	58CV(A,X)110−20	40500	11.0	13.20	41000	3.56	8.2	24200	2.46
3029928	25HBS342(A,G)50	CSRH*4212A**	58CV(A,X)135−22	40500	11.2	13.50	41000	3.58	8.2	24000	2.48
3029929	25HBS342(A,G)50	CSRH*4212A**	58CV(A,X)155−22	40500	11.2	13.50	41000	3.60	8.2	24000	2.48
3123228	25HBS342(A,G)50	CSRH*4212A**	58MEB040−12	41000	11.0	13.20	41000	3.56	8.3	24400	2.46
3123229	25HBS342(A,G)50	CSRH*4212A**	58MEB060−12	41000	11.0	13.20	41000	3.54	8.1	24400	2.44
3123230	25HBS342(A,G)50	CSRH*4212A**	58MEB080−12	41000	11.0	13.25	41000	3.56	8.2	24400	2.46
3123231	25HBS342(A,G)50	CSRH*4212A**	58MEB080−16	40500	11.0	13.25	41000	3.56	8.1	24200	2.44
3123232	25HBS342(A,G)50	CSRH*4212A**	58MEB100−20	41000	11.2	13.50	41000	3.60	8.3	24200	2.48
3123233	25HBS342(A,G)50	CSRH*4212A**	58MEB120−20	41000	11.2	13.50	41000	3.60	8.3	24200	2.48
3029919	25HBS342(A,G)50	CSRH*4212A**	58MV(B,C)040−14	40000	10.8	13.00	41500	3.50	8.0	24400	2.42
3029920	25HBS342(A,G)50	CSRH*4212A**	58MV(B,C)060−14	40500	11.0	13.20	41000	3.52	8.0	24200	2.44
3029921	25HBS342(A,G)50	CSRH*4212A**	58MV(B,C)080−14	40000	10.8	13.00	41500	3.48	8.0	24400	2.40
3029922	25HBS342(A,G)50	CSRH*4212A**	58MV(B,C)080−20	40500	11.0	13.20	41000	3.52	8.0	24400	2.42
3029923	25HBS342(A,G)50	CSRH*4212A**	58MV(B,C)100−20	40500	11.0	13.20	41000	3.54	8.0	24200	2.44
3029924	25HBS342(A,G)50	CSRH*4212A**	58MV(B,C)120−20	40500	11.0	13.20	41000	3.54	8.0	24200	2.44
3029862	25HBS342(A,G)50	CSRH*4212A**	58PH*090−16	41000	11.0	13.50	41000	3.58	8.2	24200	2.46
3029863	25HBS342(A,G)50	CSRH*4212A**	58PH*110−20	41000	11.0	13.50	41000	3.58	8.2	24200	2.48
3029864	25HBS342(A,G)50	CSRH*4212A**	58PH*135−20	41000	11.0	13.50	41000	3.58	8.2	24200	2.46
3029936	25HBS342(A,G)50	CSRH*4812A**	58CV(A,X)070−12	40500	10.8	13.00	41000	3.50	8.0	24400	2.42
3029937	25HBS342(A,G)50	CSRH*4812A**	58CV(A,X)090−16	40500	11.2	13.50	41000	3.56	8.2	24200	2.46
3029938	25HBS342(A,G)50	CSRH*4812A**	58CV(A,X)110−20	41000	11.2	13.50	40500	3.56	8.2	24200	2.46
3029939	25HBS342(A,G)50	CSRH*4812A**	58CV(A,X)135−22	41000	11.2	13.50	40500	3.60	8.2	24000	2.48
3029940	25HBS342(A,G)50	CSRH*4812A**	58CV(A,X)155−22	41000	11.2	13.50	40500	3.60	8.2	24000	2.48

See notes on page 31

COMBINATION RATINGS CONTINUED

ARI Ref. No.	Model Number	Coil Model Number	Furnace Model Number	Cooling Capacity	EER	SEER	High Temp		HSPF	Low Temp	
							E Capacity	E COP		H Capacity	H COP
3123234	25HBS342(A,G)50	CSRH*4812A**	58MEB040−12	41000	11.0	13.25	40500	3.56	8.2	24400	2.46
3123235	25HBS342(A,G)50	CSRH*4812A**	58MEB060−12	41000	11.0	13.20	40500	3.54	8.2	24400	2.46
3123236	25HBS342(A,G)50	CSRH*4812A**	58MEB080−12	41000	11.0	13.50	40500	3.56	8.2	24400	2.46
3123237	25HBS342(A,G)50	CSRH*4812A**	58MEB080−16	41000	11.0	13.50	40500	3.56	8.2	24400	2.46
3123238	25HBS342(A,G)50	CSRH*4812A**	58MEB100−20	41000	11.2	13.50	40500	3.60	8.3	24200	2.48
3123239	25HBS342(A,G)50	CSRH*4812A**	58MEB120−20	41000	11.2	13.50	40500	3.62	8.3	24200	2.50
3029930	25HBS342(A,G)50	CSRH*4812A**	58MV(B,C)040−14	40500	10.8	13.00	41000	3.50	8.0	24400	2.42
3029931	25HBS342(A,G)50	CSRH*4812A**	58MV(B,C)060−14	40500	11.0	13.20	41000	3.54	8.0	24200	2.44
3029932	25HBS342(A,G)50	CSRH*4812A**	58MV(B,C)080−14	40500	10.8	13.00	41000	3.50	8.0	24400	2.42
3029933	25HBS342(A,G)50	CSRH*4812A**	58MV(B,C)080−20	40500	11.0	13.20	41000	3.52	8.0	24400	2.44
3029934	25HBS342(A,G)50	CSRH*4812A**	58MV(B,C)100−20	40500	11.0	13.20	41000	3.54	8.0	24200	2.44
3029935	25HBS342(A,G)50	CSRH*4812A**	58MV(B,C)120−20	40500	11.0	13.20	41000	3.54	8.1	24200	2.46
3029865	25HBS342(A,G)50	CSRH*4812A**	58PH*090−16	41000	11.0	13.50	40500	3.58	8.2	24200	2.48
3029866	25HBS342(A,G)50	CSRH*4812A**	58PH*110−20	41000	11.0	13.50	40500	3.58	8.2	24200	2.48
3029867	25HBS342(A,G)50	CSRH*4812A**	58PH*135−20	41000	11.0	13.50	40500	3.58	8.2	24200	2.48
3029944	25HBS342(A,G)60	†FC4DN(F,B)042		41000	10.8	13.00	41000	3.50	8.0	24600	2.44
3030041	25HBS342(A,G)60	FC4DN(F,B)048		42000	11.2	13.50	38500	3.48	8.2	24600	2.50
3030042	25HBS342(A,G)60	FK4DN(B,F)003		39500	11.0	13.20	42000	3.46	7.8	24000	2.42
3030043	25HBS342(A,G)60	FK4DN(B,F)005		41500	11.2	13.50	37200	3.42	8.2	24000	2.50
3029970	25HBS342(A,G)60	CAR**4221A**	58CV(A,X)110−20	39500	11.0	13.20	42000	3.50	8.0	24000	2.42
3123304	25HBS342(A,G)60	CAR**4221A**	58MEB100−20	40000	11.0	13.25	41500	3.54	8.1	24000	2.44
3029968	25HBS342(A,G)60	CAR**4221A**	58MV(B,C)080−20	39500	10.8	13.00	42000	3.46	7.8	24200	2.40
3029969	25HBS342(A,G)60	CAR**4221A**	58MV(B,C)100−20	39500	10.8	13.00	42000	3.48	8.0	24000	2.40
3029945	25HBS342(A,G)60	CAR**4221A**	58PH*090−16	40000	11.0	13.25	42000	3.52	8.0	24000	2.42
3029946	25HBS342(A,G)60	CAR**4221A**	58PH*110−20	40000	11.0	13.25	41500	3.54	8.0	24000	2.44
3029973	25HBS342(A,G)60	CAR**4224A**	58CV(A,X)135−22	39500	11.0	13.20	41500	3.52	8.0	23800	2.44
3029974	25HBS342(A,G)60	CAR**4224A**	58CV(A,X)155−22	39500	11.2	13.50	41500	3.52	8.0	23800	2.44
3123305	25HBS342(A,G)60	CAR**4224A**	58MEB120−20	40000	11.0	13.50	41500	3.56	8.1	24000	2.46
3029971	25HBS342(A,G)60	CAR**4224A**	58MV(B,C)040−14	39500	10.8	13.00	42000	3.44	7.8	24200	2.38
3029972	25HBS342(A,G)60	CAR**4224A**	58MV(B,C)120−20	39500	11.0	13.20	42000	3.48	8.0	24000	2.42
3029947	25HBS342(A,G)60	CAR**4224A**	58PH*135−20	40000	11.0	13.25	41500	3.52	8.0	24000	2.44
3029976	25HBS342(A,G)60	CAR**4817A**	58CV(A,X)090−16	40500	11.0	13.20	39000	3.48	8.1	24200	2.46
3123306	25HBS342(A,G)60	CAR**4817A**	58MEB040−12	41000	11.0	13.20	39000	3.48	8.1	24400	2.46
3123307	25HBS342(A,G)60	CAR**4817A**	58MEB060−12	41000	11.0	13.20	39000	3.46	8.1	24400	2.46
3123308	25HBS342(A,G)60	CAR**4817A**	58MEB080−12	41000	11.0	13.25	39000	3.48	8.1	24400	2.46
3123309	25HBS342(A,G)60	CAR**4817A**	58MEB080−16	41000	11.0	13.25	39000	3.48	8.1	24400	2.46
3029975	25HBS342(A,G)60	CAR**4817A**	58MV(B,C)060−14	40500	11.0	13.20	39500	3.46	8.0	24400	2.44
3029980	25HBS342(A,G)60	CAR**4821A**	58CV(A,X)110−20	40500	11.0	13.20	40000	3.52	8.1	24200	2.46
3123310	25HBS342(A,G)60	CAR**4821A**	58MEB100−20	40500	11.2	13.50	39500	3.54	8.1	24200	2.48
3029977	25HBS342(A,G)60	CAR**4821A**	58MV(B,C)080−14	40000	10.8	13.00	40500	3.44	8.0	24400	2.40
3029978	25HBS342(A,G)60	CAR**4821A**	58MV(B,C)080−20	40000	11.0	13.20	40000	3.46	8.0	24200	2.42
3029979	25HBS342(A,G)60	CAR**4821A**	58MV(B,C)100−20	40000	11.0	13.20	40000	3.48	8.0	24200	2.44
3029948	25HBS342(A,G)60	CAR**4821A**	58PH*090−16	40500	11.0	13.50	40000	3.52	8.2	24200	2.46
3029949	25HBS342(A,G)60	CAR**4821A**	58PH*110−20	40500	11.0	13.50	39500	3.54	8.2	24200	2.48
3029983	25HBS342(A,G)60	CAR**4824A**	58CV(A,X)135−22	40500	11.2	13.50	40000	3.54	8.2	24000	2.48
3029984	25HBS342(A,G)60	CAR**4824A**	58CV(A,X)155−22	40500	11.2	13.50	40000	3.54	8.2	24000	2.48
3123311	25HBS342(A,G)60	CAR**4824A**	58MEB120−20	41000	11.2	13.50	39500	3.56	8.2	24200	2.50
3029981	25HBS342(A,G)60	CAR**4824A**	58MV(B,C)040−14	40000	10.8	13.00	40500	3.46	8.0	24200	2.42
3029982	25HBS342(A,G)60	CAR**4824A**	58MV(B,C)120−20	40000	11.0	13.20	40000	3.50	8.0	24000	2.44
3029950	25HBS342(A,G)60	CAR**4824A**	58PH*135−20	40500	11.0	13.50	40000	3.54	8.2	24200	2.48
3030003	25HBS342(A,G)60	CNRH*4221A**	58CV(A,X)070−12	39500	10.8	13.00	42000	3.46	7.9	24200	2.40
3030004	25HBS342(A,G)60	CNRH*4221A**	58CV(A,X)090−16	39500	11.0	13.20	41500	3.52	8.0	24000	2.44
3030005	25HBS342(A,G)60	CNRH*4221A**	58CV(A,X)110−20	40000	11.2	13.50	41500	3.56	8.0	23800	2.46
3030006	25HBS342(A,G)60	CNRH*4221A**	58CV(A,X)135−22	40000	11.2	13.50	41500	3.56	8.0	23800	2.48
3030007	25HBS342(A,G)60	CNRH*4221A**	58CV(A,X)155−22	40000	11.2	13.50	41500	3.56	8.0	23800	2.48
3123315	25HBS342(A,G)60	CNRH*4221A**	58MEB040−12	40000	10.7	13.00	42000	3.50	8.0	24400	2.42
3123316	25HBS342(A,G)60	CNRH*4221A**	58MEB060−12	40000	10.7	13.00	42000	3.48	8.0	24400	2.40
3123317	25HBS342(A,G)60	CNRH*4221A**	58MEB080−12	40000	10.8	13.00	42000	3.50	8.0	24200	2.42
3123318	25HBS342(A,G)60	CNRH*4221A**	58MEB080−16	39500	10.8	13.00	42000	3.48	8.0	24200	2.40
3123319	25HBS342(A,G)60	CNRH*4221A**	58MEB100−20	40000	11.0	13.20	42000	3.52	8.1	24000	2.44
3123320	25HBS342(A,G)60	CNRH*4221A**	58MEB120−20	40000	11.0	13.25	42000	3.54	8.1	24000	2.44
3029997	25HBS342(A,G)60	CNRH*4221A**	58MV(B,C)040−14	39500	10.8	13.00	42000	3.48	8.0	24000	2.40
3029998	25HBS342(A,G)60	CNRH*4221A**	58MV(B,C)060−14	39500	11.0	13.20	42000	3.50	8.0	24000	2.42
3029999	25HBS342(A,G)60	CNRH*4221A**	58MV(B,C)080−14	39500	10.8	13.00	42000	3.46	7.8	24000	2.40
3030000	25HBS342(A,G)60	CNRH*4221A**	58MV(B,C)080−20	39500	11.0	13.20	42000	3.50	8.0	24000	2.42
3030001	25HBS342(A,G)60	CNRH*4221A**	58MV(B,C)100−20	39500	11.0	13.20	42000	3.52	8.0	24000	2.44
3030002	25HBS342(A,G)60	CNRH*4221A**	58MV(B,C)120−20	39500	11.0	13.20	41500	3.52	8.0	23800	2.44
3029956	25HBS342(A,G)60	CNRH*4221A**	58PH*090−16	39500	11.0	13.25	42000	3.50	8.0	24000	2.42
3029957	25HBS342(A,G)60	CNRH*4221A**	58PH*110−20	40000	11.0	13.25	42000	3.50	8.0	24000	2.42
3029958	25HBS342(A,G)60	CNRH*4221A**	58PH*135−20	39500	11.0	13.25	42000	3.50	8.0	24000	2.42
3030014	25HBS342(A,G)60	CNRH*4821A**	58CV(A,X)070−12	40000	10.8	13.00	41500	3.50	8.0	24400	2.42
3030015	25HBS342(A,G)60	CNRH*4821A**	58CV(A,X)090−16	40500	11.2	13.50	41000	3.56	8.1	24000	2.46
3030016	25HBS342(A,G)60	CNRH*4821A**	58CV(A,X)110−20	40500	11.2	13.50	41000	3.58	8.2	24000	2.46
3030017	25HBS342(A,G)60	CNRH*4821A**	58CV(A,X)135−22	40500	11.2	13.50	41000	3.60	8.2	24000	2.48
3030018	25HBS342(A,G)60	CNRH*4821A**	58CV(A,X)155−22	40500	11.2	13.50	41000	3.60	8.2	24000	2.48
3123321	25HBS342(A,G)60	CNRH*4821A**	58MEB040−12	41000	11.0	13.20	41000	3.56	8.2	24400	2.46
3123322	25HBS342(A,G)60	CNRH*4821A**	58MEB060−12	41000	11.0	13.20	41000	3.54	8.2	24400	2.46
3123323	25HBS342(A,G)60	CNRH*4821A**	58MEB080−12	41000	11.0	13.25	41000	3.56	8.2	24400	2.46
3123324	25HBS342(A,G)60	CNRH*4821A**	58MEB080−16	40500	11.0	13.25	41000	3.56	8.2	24200	2.46
3123325	25HBS342(A,G)60	CNRH*4821A**	58MEB100−20	41000	11.1	13.50	40500	3.60	8.3	24200	2.48
3123326	25HBS342(A,G)60	CNRH*4821A**	58MEB120−20	41000	11.2	13.50	40500	3.62	8.3	24200	2.50
3030008	25HBS342(A,G)60	CNRH*4821A**	58MV(B,C)040−14	40000	10.8	13.00	41500	3.50	8.0	24200	2.42
3030009	25HBS342(A,G)60	CNRH*4821A**	58MV(B,C)060−14	40500	11.0	13.20	41000	3.54	8.0	24200	2.44
3030010	25HBS342(A,G)60	CNRH*4821A**	58MV(B,C)080−14	40000	10.8	13.00	41500	3.50	8.0	24400	2.42
3030011	25HBS342(A,G)60	CNRH*4821A**	58MV(B,C)080−20	40500	11.0	13.20	41000	3.52	8.0	24200	2.44
3030012	25HBS342(A,G)60	CNRH*4821A**	58MV(B,C)100−20	40500	11.0	13.20	41000	3.56	8.1	24200	2.46

See notes on page 31

COMBINATION RATINGS CONTINUED

ARI Ref. No.	Model Number	Coil Model Number	Furnace Model Number	Cooling Capacity	EER	SEER	High Temp		HSPF	Low Temp	
							E Capacity	E COP		H Capacity	H COP
3030013	25HBS342(A,G)60	CNRH*4821A**	58MV(B,C)120−20	40500	11.0	13.20	41000	3.56	8.1	24000	2.46
3029959	25HBS342(A,G)60	CNRH*4821A**	58PH*090−16	40500	11.0	13.50	40500	3.58	8.2	24200	2.48
3029960	25HBS342(A,G)60	CNRH*4821A**	58PH*110−20	41000	11.0	13.50	40500	3.60	8.2	24200	2.48
3029961	25HBS342(A,G)60	CNRH*4821A**	58PH*135−20	41000	11.0	13.50	40500	3.58	8.2	24200	2.48
3029988	25HBS342(A,G)60	CNRV*4221A**	58CV(A,X)110−20	40000	11.2	13.50	41500	3.56	8.0	23800	2.46
3123312	25HBS342(A,G)60	CNRV*4221A**	58MEB100−20	40000	11.0	13.20	42000	3.52	8.1	24000	2.44
3029985	25HBS342(A,G)60	CNRV*4221A**	58MV(B,C)080−14	39500	10.8	13.00	42000	3.46	7.8	24000	2.40
3029986	25HBS342(A,G)60	CNRV*4221A**	58MV(B,C)080−20	39500	11.0	13.20	42000	3.50	8.0	24000	2.42
3029987	25HBS342(A,G)60	CNRV*4221A**	58MV(B,C)100−20	39500	11.0	13.20	42000	3.52	8.0	24000	2.44
3029951	25HBS342(A,G)60	CNRV*4221A**	58PH*090−16	39500	11.0	13.25	42000	3.50	8.0	24000	2.42
3029952	25HBS342(A,G)60	CNRV*4221A**	58PH*110−20	40000	11.0	13.25	42000	3.50	8.0	24000	2.42
3029992	25HBS342(A,G)60	CNRV*4821A**	58CV(A,X)110−20	40500	11.2	13.50	41000	3.58	8.2	24000	2.46
3123313	25HBS342(A,G)60	CNRV*4821A**	58MEB100−20	41000	11.2	13.50	40500	3.60	8.2	24200	2.48
3029989	25HBS342(A,G)60	CNRV*4821A**	58MV(B,C)080−14	40000	10.8	13.00	41500	3.50	8.0	24200	2.42
3029990	25HBS342(A,G)60	CNRV*4821A**	58MV(B,C)080−20	40500	11.0	13.20	41000	3.52	8.0	24200	2.44
3029991	25HBS342(A,G)60	CNRV*4821A**	58MV(B,C)100−20	40500	11.0	13.20	41000	3.54	8.0	24200	2.46
3029953	25HBS342(A,G)60	CNRV*4821A**	58PH*090−16	40500	11.0	13.50	41000	3.58	8.2	24200	2.48
3029954	25HBS342(A,G)60	CNRV*4821A**	58PH*110−20	41000	11.0	13.50	40500	3.60	8.2	24200	2.48
3029995	25HBS342(A,G)60	CNRV*4824A**	58CV(A,X)135−22	40500	11.2	13.50	41000	3.60	8.2	24000	2.48
3029996	25HBS342(A,G)60	CNRV*4824A**	58CV(A,X)155−22	40500	11.2	13.50	41000	3.60	8.2	24000	2.48
3123314	25HBS342(A,G)60	CNRV*4824A**	58MEB120−20	41000	11.3	13.50	40500	3.62	8.3	24200	2.50
3029993	25HBS342(A,G)60	CNRV*4824A**	58MV(B,C)040−14	40000	10.8	13.00	41500	3.50	8.0	24200	2.42
3029994	25HBS342(A,G)60	CNRV*4824A**	58MV(B,C)120−20	40500	11.0	13.20	41000	3.56	8.1	24000	2.46
3029955	25HBS342(A,G)60	CNRV*4824A**	58PH*135−20	41000	11.0	13.50	40500	3.58	8.2	24200	2.48
3030025	25HBS342(A,G)60	CSRH*4212A**	58CV(A,X)070−12	40500	10.8	13.00	41500	3.50	8.0	24400	2.42
3030026	25HBS342(A,G)60	CSRH*4212A**	58CV(A,X)090−16	40500	11.0	13.20	41000	3.56	8.1	24200	2.46
3030027	25HBS342(A,G)60	CSRH*4212A**	58CV(A,X)110−20	40500	11.0	13.20	41000	3.56	8.2	24200	2.46
3030028	25HBS342(A,G)60	CSRH*4212A**	58CV(A,X)135−22	40500	11.2	13.50	41000	3.58	8.2	24000	2.48
3030029	25HBS342(A,G)60	CSRH*4212A**	58CV(A,X)155−22	40500	11.2	13.50	41000	3.60	8.2	24000	2.48
3123327	25HBS342(A,G)60	CSRH*4212A**	58MEB040−12	41000	11.0	13.20	41000	3.56	8.3	24400	2.46
3123328	25HBS342(A,G)60	CSRH*4212A**	58MEB060−12	41000	11.0	13.20	41000	3.54	8.1	24400	2.44
3123329	25HBS342(A,G)60	CSRH*4212A**	58MEB080−12	41000	11.0	13.25	41000	3.56	8.2	24400	2.46
3123330	25HBS342(A,G)60	CSRH*4212A**	58MEB080−16	40500	11.0	13.25	41000	3.56	8.1	24200	2.44
3123331	25HBS342(A,G)60	CSRH*4212A**	58MEB100−20	41000	11.2	13.50	41000	3.60	8.3	24200	2.48
3123332	25HBS342(A,G)60	CSRH*4212A**	58MEB120−20	41000	11.2	13.50	41000	3.60	8.3	24200	2.48
3030019	25HBS342(A,G)60	CSRH*4212A**	58MV(B,C)040−14	40000	10.8	13.00	41500	3.50	8.0	24400	2.42
3030020	25HBS342(A,G)60	CSRH*4212A**	58MV(B,C)060−14	40500	11.0	13.20	41000	3.52	8.0	24200	2.44
3030021	25HBS342(A,G)60	CSRH*4212A**	58MV(B,C)080−14	40000	10.8	13.00	41500	3.48	8.0	24400	2.40
3030022	25HBS342(A,G)60	CSRH*4212A**	58MV(B,C)080−20	40500	11.0	13.20	41000	3.52	8.0	24400	2.42
3030023	25HBS342(A,G)60	CSRH*4212A**	58MV(B,C)100−20	40500	11.0	13.20	41000	3.54	8.0	24200	2.44
3030024	25HBS342(A,G)60	CSRH*4212A**	58MV(B,C)120−20	40500	11.0	13.20	41000	3.54	8.0	24200	2.44
3029962	25HBS342(A,G)60	CSRH*4212A**	58PH*090−16	41000	11.0	13.50	41000	3.58	8.2	24200	2.46
3029963	25HBS342(A,G)60	CSRH*4212A**	58PH*110−20	41000	11.0	13.50	41000	3.58	8.2	24200	2.48
3029964	25HBS342(A,G)60	CSRH*4212A**	58PH*135−20	41000	11.0	13.50	41000	3.58	8.2	24200	2.46
3030036	25HBS342(A,G)60	CSRH*4812A**	58CV(A,X)070−12	40500	10.8	13.00	41000	3.50	8.0	24400	2.42
3030037	25HBS342(A,G)60	CSRH*4812A**	58CV(A,X)090−16	40500	11.2	13.50	41000	3.56	8.2	24200	2.46
3030038	25HBS342(A,G)60	CSRH*4812A**	58CV(A,X)110−20	41000	11.2	13.50	40500	3.56	8.2	24200	2.46
3030039	25HBS342(A,G)60	CSRH*4812A**	58CV(A,X)135−22	41000	11.2	13.50	40500	3.60	8.2	24000	2.48
3030040	25HBS342(A,G)60	CSRH*4812A**	58CV(A,X)155−22	41000	11.2	13.50	40500	3.60	8.2	24000	2.48
3123333	25HBS342(A,G)60	CSRH*4812A**	58MEB040−12	41000	11.0	13.25	40500	3.56	8.2	24400	2.46
3123334	25HBS342(A,G)60	CSRH*4812A**	58MEB060−12	41000	11.0	13.20	40500	3.54	8.2	24400	2.46
3123335	25HBS342(A,G)60	CSRH*4812A**	58MEB080−12	41000	11.0	13.50	40500	3.56	8.2	24400	2.46
3123336	25HBS342(A,G)60	CSRH*4812A**	58MEB080−16	41000	11.0	13.50	40500	3.56	8.2	24400	2.46
3123337	25HBS342(A,G)60	CSRH*4812A**	58MEB100−20	41000	11.2	13.50	40500	3.60	8.3	24200	2.48
3123338	25HBS342(A,G)60	CSRH*4812A**	58MEB120−20	41000	11.2	13.50	40500	3.62	8.3	24200	2.50
3030030	25HBS342(A,G)60	CSRH*4812A**	58MV(B,C)040−14	40500	10.8	13.00	41000	3.50	8.0	24400	2.42
3030031	25HBS342(A,G)60	CSRH*4812A**	58MV(B,C)060−14	40500	11.0	13.20	41000	3.54	8.0	24200	2.44
3030032	25HBS342(A,G)60	CSRH*4812A**	58MV(B,C)080−14	40500	10.8	13.00	41000	3.50	8.0	24400	2.42
3030033	25HBS342(A,G)60	CSRH*4812A**	58MV(B,C)080−20	40500	11.0	13.20	41000	3.52	8.0	24400	2.44
3030034	25HBS342(A,G)60	CSRH*4812A**	58MV(B,C)100−20	40500	11.0	13.20	41000	3.54	8.0	24200	2.44
3030035	25HBS342(A,G)60	CSRH*4812A**	58MV(B,C)120−20	40500	11.0	13.20	41000	3.54	8.1	24200	2.46
3029965	25HBS342(A,G)60	CSRH*4812A**	58PH*090−16	41000	11.0	13.50	40500	3.58	8.2	24200	2.48
3029966	25HBS342(A,G)60	CSRH*4812A**	58PH*110−20	41000	11.0	13.50	40500	3.58	8.2	24200	2.48
3029967	25HBS342(A,G)60	CSRH*4812A**	58PH*135−20	41000	11.0	13.50	40500	3.58	8.2	24200	2.48
3030044	25HBS348(A,G)30	†FC4DN(F,B)048		46500	11.0	13.00	47000	3.56	8.0	30000	2.58
3030112	25HBS348(A,G)30	FC4DN(F,B)060		48000	11.2	13.50	42500	3.40	8.1	30000	2.62
3030113	25HBS348(A,G)30	FK4DN(B,F)005		46500	11.2	13.50	46000	3.50	7.9	29400	2.58
3030114	25HBS348(A,G)30	FK4DNB006		47500	12.0	14.00	44500	3.56	8.1	29200	2.64
3030064	25HBS348(A,G)30	CAR**4817A**	58CV(A,X)090−16	45500	10.8	13.00	47000	3.44	7.7	29800	2.52
3111411	25HBS348(A,G)30	CAR**4817A**	58MEB080−16	45500	11.0	13.00	47000	3.46	7.9	30000	2.52
3030066	25HBS348(A,G)30	CAR**4821A**	58CV(A,X)110−20	45000	10.8	13.00	46500	3.38	7.7	29600	2.52
3111412	25HBS348(A,G)30	CAR**4821A**	58MEB100−20	45500	11.0	13.20	46500	3.42	7.8	29400	2.54
3030065	25HBS348(A,G)30	CAR**4821A**	58MV(B,C)100−20	45000	10.8	13.00	46500	3.36	7.7	29600	2.50
3030045	25HBS348(A,G)30	CAR**4821A**	58PH*090−16	45500	11.0	13.00	47000	3.40	7.8	29600	2.52
3030046	25HBS348(A,G)30	CAR**4821A**	58PH*110−20	45500	11.0	13.00	46500	3.42	7.8	29400	2.54
3030068	25HBS348(A,G)30	CAR**4824A**	58CV(A,X)135−22	45000	11.0	13.20	46500	3.42	7.7	29400	2.54
3030069	25HBS348(A,G)30	CAR**4824A**	58CV(A,X)155−22	45500	11.2	13.50	46500	3.44	7.7	29200	2.56
3111413	25HBS348(A,G)30	CAR**4824A**	58MEB120−20	45500	11.1	13.20	46500	3.46	7.9	29400	2.56
3030067	25HBS348(A,G)30	CAR**4824A**	58MV(B,C)120−20	45000	10.8	13.00	46500	3.36	7.7	29600	2.50
3030047	25HBS348(A,G)30	CAR**4824A**	58PH*135−20	45500	11.0	13.00	46500	3.42	7.8	29600	2.54
3030072	25HBS348(A,G)30	CAR**6021A**	58CV(A,X)110−20	46500	11.2	13.50	44500	3.40	7.7	29600	2.56
3111414	25HBS348(A,G)30	CAR**6021A**	58MEB100−20	46500	11.5	13.50	42500	3.36	7.8	29600	2.58
3030070	25HBS348(A,G)30	CAR**6021A**	58MV(B,C)080−20	46000	11.0	13.20	45000	3.36	7.7	29600	2.52
3030071	25HBS348(A,G)30	CAR**6021A**	58MV(B,C)100−20	46000	11.0	13.20	44500	3.38	7.7	29600	2.54
3030074	25HBS348(A,G)30	CAR**6024A**	58CV(A,X)135−22	46500	11.2	13.50	44500	3.42	7.9	29400	2.58
3030075	25HBS348(A,G)30	CAR**6024A**	58CV(A,X)155−22	46500	11.2	13.50	44000	3.42	8.0	29400	2.58

See notes on page 31

COMBINATION RATINGS CONTINUED

ARI Ref. No.	Model Number	Coil Model Number	Furnace Model Number	Cooling Capacity	EER	SEER	High Temp		HSPF	Low Temp	
							E Capacity	E COP		H Capacity	H COP
3111415	25HBS348(A,G)30	CAR**6024A**	58MEB120−20	46500	11.5	13.50	42500	3.38	7.8	29600	2.58
3030073	25HBS348(A,G)30	CAR**6024A**	58MV(B,C)120−20	46000	11.0	13.20	45000	3.38	7.7	29600	2.54
3030086	25HBS348(A,G)30	CNRH*4821A**	58CV(A,X)090−16	45000	10.8	13.00	46500	3.38	7.7	29400	2.52
3030087	25HBS348(A,G)30	CNRH*4821A**	58CV(A,X)110−20	45500	11.0	13.20	46500	3.38	7.7	29400	2.52
3030088	25HBS348(A,G)30	CNRH*4821A**	58CV(A,X)135−22	45500	11.0	13.20	46500	3.42	7.7	29200	2.54
3030089	25HBS348(A,G)30	CNRH*4821A**	58CV(A,X)155−22	45500	11.2	13.50	46500	3.44	7.7	29200	2.56
3111419	25HBS348(A,G)30	CNRH*4821A**	58MEB080−16	45500	11.0	13.00	47000	3.38	7.7	29800	2.52
3111420	25HBS348(A,G)30	CNRH*4821A**	58MEB100−20	45500	11.1	13.20	46500	3.42	7.9	29400	2.56
3111421	25HBS348(A,G)30	CNRH*4821A**	58MEB120−20	45500	11.2	13.20	46500	3.44	7.9	29400	2.56
3030084	25HBS348(A,G)30	CNRH*4821A**	58MV(B,C)100−20	45000	10.8	13.00	46500	3.36	7.7	29600	2.52
3030085	25HBS348(A,G)30	CNRH*4821A**	58MV(B,C)120−20	45000	10.8	13.00	46500	3.36	7.7	29400	2.52
3030052	25HBS348(A,G)30	CNRH*4821A**	58PH*090−16	45500	11.0	13.00	47000	3.42	7.8	29600	2.54
3030053	25HBS348(A,G)30	CNRH*4821A**	58PH*110−20	45500	11.0	13.25	46500	3.44	7.8	29400	2.56
3030054	25HBS348(A,G)30	CNRH*4821A**	58PH*135−20	45500	11.0	13.00	46500	3.42	7.8	29400	2.54
3030093	25HBS348(A,G)30	CNRH*6024A**	58CV(A,X)090−16	46000	11.0	13.20	46000	3.44	7.7	29600	2.54
3030094	25HBS348(A,G)30	CNRH*6024A**	58CV(A,X)110−20	46000	11.2	13.50	46000	3.46	7.8	29400	2.56
3030095	25HBS348(A,G)30	CNRH*6024A**	58CV(A,X)135−22	46500	11.2	13.50	46000	3.48	7.8	29400	2.58
3030096	25HBS348(A,G)30	CNRH*6024A**	58CV(A,X)155−22	46500	11.2	13.50	46000	3.50	7.9	29200	2.60
3111422	25HBS348(A,G)30	CNRH*6024A**	58MEB080−16	46500	11.0	13.00	46000	3.42	7.9	30000	2.54
3111423	25HBS348(A,G)30	CNRH*6024A**	58MEB100−20	46500	11.4	13.50	46000	3.48	7.9	29600	2.58
3111424	25HBS348(A,G)30	CNRH*6024A**	58MEB120−20	46500	11.5	13.50	45500	3.50	8.0	29600	2.60
3030090	25HBS348(A,G)30	CNRH*6024A**	58MV(B,C)080−20	46000	11.0	13.20	46500	3.42	7.7	29600	2.52
3030091	25HBS348(A,G)30	CNRH*6024A**	58MV(B,C)100−20	46000	11.0	13.20	46000	3.42	7.7	29600	2.54
3030092	25HBS348(A,G)30	CNRH*6024A**	58MV(B,C)120−20	46000	11.0	13.20	46000	3.42	7.7	29600	2.54
3030055	25HBS348(A,G)30	CNRH*6024A**	58PH*090−16	46500	11.0	13.25	46000	3.46	7.9	29800	2.56
3030056	25HBS348(A,G)30	CNRH*6024A**	58PH*110−20	46500	11.5	13.50	46000	3.50	8.0	29400	2.58
3030057	25HBS348(A,G)30	CNRH*6024A**	58PH*135−20	46500	11.5	13.50	46000	3.48	7.9	29600	2.58
3030077	25HBS348(A,G)30	CNRV*4821A**	58CV(A,X)110−20	45500	11.0	13.20	46500	3.38	7.7	29400	2.52
3111416	25HBS348(A,G)30	CNRV*4821A**	58MEB100−20	45500	11.1	13.20	46500	3.42	7.9	29400	2.56
3030076	25HBS348(A,G)30	CNRV*4821A**	58MV(B,C)100−20	45000	10.8	13.00	46500	3.36	7.7	29600	2.52
3030048	25HBS348(A,G)30	CNRV*4821A**	58PH*090−16	45500	11.0	13.00	47000	3.42	7.8	29600	2.54
3030049	25HBS348(A,G)30	CNRV*4821A**	58PH*110−20	45500	11.0	13.25	46500	3.44	7.8	29400	2.56
3030079	25HBS348(A,G)30	CNRV*4824A**	58CV(A,X)135−22	45500	11.0	13.20	46500	3.42	7.7	29200	2.54
3030080	25HBS348(A,G)30	CNRV*4824A**	58CV(A,X)155−22	45500	11.2	13.50	46500	3.44	7.7	29200	2.56
3111417	25HBS348(A,G)30	CNRV*4824A**	58MEB120−20	45500	11.2	13.20	46500	3.44	7.9	29400	2.56
3030078	25HBS348(A,G)30	CNRV*4824A**	58MV(B,C)120−20	45000	10.8	13.00	46500	3.36	7.7	29400	2.52
3030050	25HBS348(A,G)30	CNRV*4824A**	58PH*135−20	45500	11.0	13.00	46500	3.42	7.8	29400	2.54
3030082	25HBS348(A,G)30	CNRV*6024A**	58CV(A,X)135−22	46500	11.2	13.50	46000	3.48	7.8	29400	2.58
3030083	25HBS348(A,G)30	CNRV*6024A**	58CV(A,X)155−22	46500	11.2	13.50	46000	3.50	7.9	29200	2.60
3111418	25HBS348(A,G)30	CNRV*6024A**	58MEB120−20	46500	11.5	13.50	45500	3.50	8.0	29600	2.60
3030081	25HBS348(A,G)30	CNRV*6024A**	58MV(B,C)120−20	46000	11.0	13.20	46000	3.42	7.7	29600	2.54
3030051	25HBS348(A,G)30	CNRV*6024A**	58PH*135−20	46500	11.5	13.50	46000	3.48	7.9	29600	2.58
3030100	25HBS348(A,G)30	CSRH*4812A**	58CV(A,X)090−16	45500	10.8	13.00	46500	3.40	7.7	29600	2.52
3030101	25HBS348(A,G)30	CSRH*4812A**	58CV(A,X)110−20	45500	11.0	13.20	46500	3.42	7.7	29600	2.54
3030102	25HBS348(A,G)30	CSRH*4812A**	58CV(A,X)135−22	46000	11.0	13.20	46500	3.44	7.7	29400	2.54
3030103	25HBS348(A,G)30	CSRH*4812A**	58CV(A,X)155−22	46000	11.2	13.50	46500	3.46	7.8	29400	2.56
3111425	25HBS348(A,G)30	CSRH*4812A**	58MEB080−16	46000	11.0	13.00	47000	3.42	7.8	30000	2.52
3111426	25HBS348(A,G)30	CSRH*4812A**	58MEB100−20	46000	11.1	13.20	46500	3.44	7.9	29600	2.56
3111427	25HBS348(A,G)30	CSRH*4812A**	58MEB120−20	46000	11.2	13.25	46500	3.46	7.9	29400	2.56
3030097	25HBS348(A,G)30	CSRH*4812A**	58MV(B,C)080−20	45500	10.8	13.00	47000	3.38	7.7	29800	2.50
3030098	25HBS348(A,G)30	CSRH*4812A**	58MV(B,C)100−20	45500	10.8	13.00	47000	3.40	7.7	29600	2.52
3030099	25HBS348(A,G)30	CSRH*4812A**	58MV(B,C)120−20	45500	10.8	13.00	46500	3.38	7.7	29600	2.52
3030058	25HBS348(A,G)30	CSRH*4812A**	58PH*090−16	46000	11.0	13.00	47000	3.44	7.8	29600	2.54
3030059	25HBS348(A,G)30	CSRH*4812A**	58PH*110−20	45500	11.0	13.25	46500	3.44	7.8	29400	2.56
3030060	25HBS348(A,G)30	CSRH*4812A**	58PH*135−20	45500	11.0	13.25	47000	3.44	7.8	29600	2.54
3030108	25HBS348(A,G)30	CSRH*6012A**	58CV(A,X)090−16	46500	11.2	13.50	46000	3.48	7.8	29600	2.56
3030109	25HBS348(A,G)30	CSRH*6012A**	58CV(A,X)110−20	46500	11.2	13.50	46000	3.50	7.8	29600	2.56
3030110	25HBS348(A,G)30	CSRH*6012A**	58CV(A,X)135−22	46500	11.2	13.50	46000	3.52	8.0	29400	2.58
3030111	25HBS348(A,G)30	CSRH*6012A**	58CV(A,X)155−22	47000	11.5	13.50	45500	3.54	8.0	29400	2.60
3111428	25HBS348(A,G)30	CSRH*6012A**	58MEB080−16	47000	11.1	13.20	45500	3.46	7.9	30000	2.56
3111429	25HBS348(A,G)30	CSRH*6012A**	58MEB100−20	47000	11.5	13.50	45500	3.52	8.0	29600	2.60
3111430	25HBS348(A,G)30	CSRH*6012A**	58MEB120−20	47000	11.6	13.50	45500	3.54	8.1	29600	2.60
3030105	25HBS348(A,G)30	CSRH*6012A**	58MV(B,C)080−20	46500	11.2	13.20	46000	3.44	7.7	29800	2.54
3030106	25HBS348(A,G)30	CSRH*6012A**	58MV(B,C)100−20	46500	11.0	13.20	46000	3.46	7.8	29600	2.54
3030107	25HBS348(A,G)30	CSRH*6012A**	58MV(B,C)120−20	46500	11.2	13.50	46000	3.46	7.8	29600	2.54
3030061	25HBS348(A,G)30	CSRH*6012A**	58PH*090−16	47000	11.5	13.50	46000	3.50	8.0	29800	2.58
3030062	25HBS348(A,G)30	CSRH*6012A**	58PH*110−20	47000	11.5	13.50	46000	3.54	8.0	29400	2.60
3030063	25HBS348(A,G)30	CSRH*6012A**	58PH*135−20	47000	11.5	13.50	46000	3.52	8.0	29600	2.58
3030104	25HBS348(A,G)30	CSRH*6012A**+TDR		47000	10.8	13.00	44500	3.36	7.8	30600	2.52
3030115	25HBS348(A,G)50	†FC4DN(F,B)048		46500	11.0	13.00	47000	3.56	8.0	30000	2.58
3030183	25HBS348(A,G)50	FC4DN(F,B)060		48000	11.2	13.50	42500	3.40	8.1	30000	2.62
3030184	25HBS348(A,G)50	FK4DN(B,F)005		46500	11.2	13.50	46000	3.50	7.9	29400	2.58
3030185	25HBS348(A,G)50	FK4DNB006		47500	12.0	14.00	44500	3.56	8.1	29200	2.64
3030135	25HBS348(A,G)50	CAR**4817A**	58CV(A,X)090−16	45500	10.8	13.00	47000	3.44	7.7	29800	2.52
3123240	25HBS348(A,G)50	CAR**4817A**	58MEB080−16	45500	11.0	13.00	47000	3.46	7.9	30000	2.52
3030137	25HBS348(A,G)50	CAR**4821A**	58CV(A,X)110−20	45000	10.8	13.00	46500	3.38	7.7	29600	2.52
3123241	25HBS348(A,G)50	CAR**4821A**	58MEB100−20	45500	11.0	13.20	46500	3.42	7.8	29400	2.54
3030136	25HBS348(A,G)50	CAR**4821A**	58MV(B,C)100−20	45000	10.8	13.00	46500	3.36	7.7	29600	2.50
3030116	25HBS348(A,G)50	CAR**4821A**	58PH*090−16	45500	11.0	13.00	47000	3.40	7.8	29600	2.52
3030117	25HBS348(A,G)50	CAR**4821A**	58PH*110−20	45500	11.0	13.00	46500	3.42	7.8	29400	2.54
3030139	25HBS348(A,G)50	CAR**4824A**	58CV(A,X)135−22	45000	11.0	13.20	46500	3.42	7.7	29400	2.54
3030140	25HBS348(A,G)50	CAR**4824A**	58CV(A,X)155−22	45500	11.2	13.50	46500	3.44	7.7	29200	2.56
3123242	25HBS348(A,G)50	CAR**4824A**	58MEB120−20	45500	11.1	13.20	46500	3.46	7.9	29400	2.56
3030138	25HBS348(A,G)50	CAR**4824A**	58MV(B,C)120−20	45000	10.8	13.00	46500	3.36	7.7	29600	2.50
3030118	25HBS348(A,G)50	CAR**4824A**	58PH*135−20	45500	11.0	13.00	46500	3.42	7.8	29600	2.54
3030143	25HBS348(A,G)50	CAR**6021A**	58CV(A,X)110−20	46500	11.2	13.50	44500	3.40	7.7	29600	2.56

See notes on page 31

COMBINATION RATINGS CONTINUED

ARI Ref. No.	Model Number	Coil Model Number	Furnace Model Number	Cooling Capacity	EER	SEER	High Temp		HSPF	Low Temp	
							E Capacity	E COP		H Capacity	H COP
3123243	25HBS348(A,G)50	CAR**6021A**	58MEB100−20	46500	11.5	13.50	42500	3.36	7.8	29600	2.58
3030141	25HBS348(A,G)50	CAR**6021A**	58MV(B,C)080−20	46000	11.0	13.20	45000	3.36	7.7	29600	2.52
3030142	25HBS348(A,G)50	CAR**6021A**	58MV(B,C)100−20	46000	11.0	13.20	44500	3.38	7.7	29600	2.54
3030145	25HBS348(A,G)50	CAR**6024A**	58CV(A,X)135−22	46500	11.2	13.50	44500	3.42	7.9	29400	2.58
3030146	25HBS348(A,G)50	CAR**6024A**	58CV(A,X)155−22	46500	11.2	13.50	44000	3.42	8.0	29400	2.58
3123244	25HBS348(A,G)50	CAR**6024A**	58MEB120−20	46500	11.5	13.50	42500	3.38	7.8	29600	2.58
3030144	25HBS348(A,G)50	CAR**6024A**	58MV(B,C)120−20	46000	11.0	13.20	45000	3.38	7.7	29600	2.54
3030157	25HBS348(A,G)50	CNRH*4821A**	58CV(A,X)090−16	45000	10.8	13.00	46500	3.38	7.7	29400	2.52
3030158	25HBS348(A,G)50	CNRH*4821A**	58CV(A,X)110−20	45500	11.0	13.20	46500	3.38	7.7	29400	2.52
3030159	25HBS348(A,G)50	CNRH*4821A**	58CV(A,X)135−22	45500	11.0	13.20	46500	3.42	7.7	29200	2.54
3030160	25HBS348(A,G)50	CNRH*4821A**	58CV(A,X)155−22	45500	11.2	13.50	46500	3.44	7.7	29200	2.56
3123248	25HBS348(A,G)50	CNRH*4821A**	58MEB080−16	45500	11.0	13.00	47000	3.38	7.7	29800	2.52
3123249	25HBS348(A,G)50	CNRH*4821A**	58MEB100−20	45500	11.1	13.20	46500	3.42	7.9	29400	2.56
3123250	25HBS348(A,G)50	CNRH*4821A**	58MEB120−20	45500	11.2	13.20	46500	3.44	7.9	29400	2.56
3030155	25HBS348(A,G)50	CNRH*4821A**	58MV(B,C)100−20	45000	10.8	13.00	46500	3.36	7.7	29600	2.52
3030156	25HBS348(A,G)50	CNRH*4821A**	58MV(B,C)120−20	45000	10.8	13.00	46500	3.36	7.7	29400	2.52
3030123	25HBS348(A,G)50	CNRH*4821A**	58PH*090−16	45500	11.0	13.00	47000	3.42	7.8	29600	2.54
3030124	25HBS348(A,G)50	CNRH*4821A**	58PH*110−20	45500	11.0	13.25	46500	3.44	7.8	29400	2.56
3030125	25HBS348(A,G)50	CNRH*4821A**	58PH*135−20	45500	11.0	13.00	46500	3.42	7.8	29400	2.54
3030164	25HBS348(A,G)50	CNRH*6024A**	58CV(A,X)090−16	46000	11.0	13.20	46000	3.44	7.7	29600	2.54
3030165	25HBS348(A,G)50	CNRH*6024A**	58CV(A,X)110−20	46000	11.2	13.50	46000	3.46	7.8	29400	2.56
3030166	25HBS348(A,G)50	CNRH*6024A**	58CV(A,X)135−22	46500	11.2	13.50	46000	3.48	7.8	29400	2.58
3030167	25HBS348(A,G)50	CNRH*6024A**	58CV(A,X)155−22	46500	11.2	13.50	46000	3.50	7.9	29200	2.60
3123251	25HBS348(A,G)50	CNRH*6024A**	58MEB080−16	46500	11.0	13.00	46000	3.42	7.9	30000	2.54
3123252	25HBS348(A,G)50	CNRH*6024A**	58MEB100−20	46500	11.4	13.50	46000	3.48	7.9	29600	2.58
3123253	25HBS348(A,G)50	CNRH*6024A**	58MEB120−20	46500	11.5	13.50	45500	3.50	8.0	29600	2.60
3030161	25HBS348(A,G)50	CNRH*6024A**	58MV(B,C)080−20	46000	11.0	13.20	46500	3.42	7.7	29600	2.52
3030162	25HBS348(A,G)50	CNRH*6024A**	58MV(B,C)100−20	46000	11.0	13.20	46000	3.42	7.7	29600	2.54
3030163	25HBS348(A,G)50	CNRH*6024A**	58MV(B,C)120−20	46000	11.0	13.20	46000	3.42	7.7	29600	2.54
3030126	25HBS348(A,G)50	CNRH*6024A**	58PH*090−16	46500	11.0	13.25	46000	3.46	7.9	29800	2.56
3030127	25HBS348(A,G)50	CNRH*6024A**	58PH*110−20	46500	11.5	13.50	46000	3.50	8.0	29400	2.58
3030128	25HBS348(A,G)50	CNRH*6024A**	58PH*135−20	46500	11.5	13.50	46000	3.48	7.9	29600	2.58
3030148	25HBS348(A,G)50	CNRV*4821A**	58CV(A,X)110−20	45500	11.0	13.20	46500	3.38	7.7	29400	2.52
3123245	25HBS348(A,G)50	CNRV*4821A**	58MEB100−20	45500	11.1	13.20	46500	3.42	7.9	29400	2.56
3030147	25HBS348(A,G)50	CNRV*4821A**	58MV(B,C)100−20	45000	10.8	13.00	46500	3.36	7.7	29600	2.52
3030119	25HBS348(A,G)50	CNRV*4821A**	58PH*090−16	45500	11.0	13.00	47000	3.42	7.8	29600	2.54
3030120	25HBS348(A,G)50	CNRV*4821A**	58PH*110−20	45500	11.0	13.25	46500	3.44	7.8	29400	2.56
3030150	25HBS348(A,G)50	CNRV*4824A**	58CV(A,X)135−22	45500	11.0	13.20	46500	3.42	7.7	29200	2.54
3030151	25HBS348(A,G)50	CNRV*4824A**	58CV(A,X)155−22	45500	11.2	13.50	46500	3.44	7.7	29200	2.56
3123246	25HBS348(A,G)50	CNRV*4824A**	58MEB120−20	45500	11.2	13.20	46500	3.44	7.9	29400	2.56
3030149	25HBS348(A,G)50	CNRV*4824A**	58MV(B,C)120−20	45000	10.8	13.00	46500	3.36	7.7	29400	2.52
3030121	25HBS348(A,G)50	CNRV*4824A**	58PH*135−20	45500	11.0	13.00	46500	3.42	7.8	29400	2.54
3030153	25HBS348(A,G)50	CNRV*6024A**	58CV(A,X)135−22	46500	11.2	13.50	46000	3.48	7.8	29400	2.58
3030154	25HBS348(A,G)50	CNRV*6024A**	58CV(A,X)155−22	46500	11.2	13.50	46000	3.50	7.9	29200	2.60
3123247	25HBS348(A,G)50	CNRV*6024A**	58MEB120−20	46500	11.5	13.50	45500	3.50	8.0	29600	2.60
3030152	25HBS348(A,G)50	CNRV*6024A**	58MV(B,C)120−20	46000	11.0	13.20	46000	3.42	7.7	29600	2.54
3030122	25HBS348(A,G)50	CNRV*6024A**	58PH*135−20	46500	11.5	13.50	46000	3.48	7.9	29600	2.58
3030171	25HBS348(A,G)50	CSRH*4812A**	58CV(A,X)090−16	45500	10.8	13.00	46500	3.40	7.7	29600	2.52
3030172	25HBS348(A,G)50	CSRH*4812A**	58CV(A,X)110−20	45500	11.0	13.20	46500	3.42	7.7	29600	2.54
3030173	25HBS348(A,G)50	CSRH*4812A**	58CV(A,X)135−22	46000	11.0	13.20	46500	3.44	7.7	29400	2.54
3030174	25HBS348(A,G)50	CSRH*4812A**	58CV(A,X)155−22	46000	11.2	13.50	46500	3.46	7.8	29400	2.56
3123254	25HBS348(A,G)50	CSRH*4812A**	58MEB080−16	46000	11.0	13.00	47000	3.42	7.8	30000	2.52
3123255	25HBS348(A,G)50	CSRH*4812A**	58MEB100−20	46000	11.1	13.20	46500	3.44	7.9	29600	2.56
3123256	25HBS348(A,G)50	CSRH*4812A**	58MEB120−20	46000	11.2	13.25	46500	3.46	7.9	29400	2.56
3030168	25HBS348(A,G)50	CSRH*4812A**	58MV(B,C)080−20	45500	10.8	13.00	47000	3.38	7.7	29800	2.50
3030169	25HBS348(A,G)50	CSRH*4812A**	58MV(B,C)100−20	45500	10.8	13.00	47000	3.40	7.7	29600	2.52
3030170	25HBS348(A,G)50	CSRH*4812A**	58MV(B,C)120−20	45500	10.8	13.00	46500	3.38	7.7	29600	2.52
3030129	25HBS348(A,G)50	CSRH*4812A**	58PH*090−16	46000	11.0	13.00	47000	3.44	7.8	29600	2.54
3030130	25HBS348(A,G)50	CSRH*4812A**	58PH*110−20	45500	11.0	13.25	46500	3.44	7.8	29400	2.56
3030131	25HBS348(A,G)50	CSRH*4812A**	58PH*135−20	45500	11.0	13.25	47000	3.44	7.8	29600	2.54
3030179	25HBS348(A,G)50	CSRH*6012A**	58CV(A,X)090−16	46500	11.2	13.50	46000	3.48	7.8	29600	2.56
3030180	25HBS348(A,G)50	CSRH*6012A**	58CV(A,X)110−20	46500	11.2	13.50	46000	3.50	7.8	29600	2.56
3030181	25HBS348(A,G)50	CSRH*6012A**	58CV(A,X)135−22	46500	11.2	13.50	46000	3.52	8.0	29400	2.58
3030182	25HBS348(A,G)50	CSRH*6012A**	58CV(A,X)155−22	47000	11.5	13.50	45500	3.54	8.0	29400	2.60
3123257	25HBS348(A,G)50	CSRH*6012A**	58MEB080−16	47000	11.1	13.20	45500	3.46	7.9	30000	2.56
3123258	25HBS348(A,G)50	CSRH*6012A**	58MEB100−20	47000	11.5	13.50	45500	3.52	8.0	29600	2.60
3123259	25HBS348(A,G)50	CSRH*6012A**	58MEB120−20	47000	11.6	13.50	45500	3.54	8.1	29600	2.60
3030176	25HBS348(A,G)50	CSRH*6012A**	58MV(B,C)080−20	46500	11.2	13.20	46000	3.44	7.7	29800	2.54
3030177	25HBS348(A,G)50	CSRH*6012A**	58MV(B,C)100−20	46500	11.0	13.20	46000	3.46	7.8	29600	2.54
3030178	25HBS348(A,G)50	CSRH*6012A**	58MV(B,C)120−20	46500	11.2	13.50	46000	3.46	7.8	29600	2.54
3030132	25HBS348(A,G)50	CSRH*6012A**	58PH*090−16	47000	11.5	13.50	46000	3.50	8.0	29800	2.58
3030133	25HBS348(A,G)50	CSRH*6012A**	58PH*110−20	47000	11.5	13.50	46000	3.54	8.0	29400	2.60
3030134	25HBS348(A,G)50	CSRH*6012A**	58PH*135−20	47000	11.5	13.50	46000	3.52	8.0	29600	2.58
3030175	25HBS348(A,G)50	CSRH*6012A**+TDR		47000	10.8	13.00	44500	3.36	7.8	30600	2.52
3030186	25HBS348(A,G)60	†FC4DN(F,B)048		46500	11.0	13.00	47000	3.56	8.0	30000	2.58
3030254	25HBS348(A,G)60	FC4DN(F,B)060		48000	11.2	13.50	42500	3.40	8.1	30000	2.62
3030255	25HBS348(A,G)60	FK4DN(B,F)005		46500	11.2	13.50	46000	3.50	7.9	29400	2.58
3030256	25HBS348(A,G)60	FK4DNB006		47500	12.0	14.00	44500	3.56	8.1	29200	2.64
3030206	25HBS348(A,G)60	CAR**4817A**	58CV(A,X)090−16	45500	10.8	13.00	47000	3.44	7.7	29800	2.52
3123339	25HBS348(A,G)60	CAR**4817A**	58MEB080−16	45500	11.0	13.00	47000	3.46	7.9	30000	2.52
3030208	25HBS348(A,G)60	CAR**4821A**	58CV(A,X)110−20	45000	10.8	13.00	46500	3.38	7.7	29600	2.52
3123340	25HBS348(A,G)60	CAR**4821A**	58MEB100−20	45500	11.0	13.20	46500	3.42	7.8	29400	2.54
3030207	25HBS348(A,G)60	CAR**4821A**	58MV(B,C)100−20	45000	10.8	13.00	46500	3.36	7.7	29600	2.50
3030187	25HBS348(A,G)60	CAR**4821A**	58PH*090−16	45500	11.0	13.00	47000	3.40	7.8	29600	2.52
3030188	25HBS348(A,G)60	CAR**4821A**	58PH*110−20	45500	11.0	13.00	46500	3.42	7.8	29400	2.54
3030210	25HBS348(A,G)60	CAR**4824A**	58CV(A,X)135−22	45000	11.0	13.20	46500	3.42	7.7	29400	2.54

See notes on page 31

COMBINATION RATINGS CONTINUED

ARI Ref. No.	Model Number	Coil Model Number	Furnace Model Number	Cooling Capacity	EER	SEER	High Temp		HSPF	Low Temp	
							E Capacity	E COP		H Capacity	H COP
3030211	25HBS348(A,G)60	CAR**4824A**	58CV(A,X)155–22	45500	11.2	13.50	46500	3.44	7.7	29200	2.56
3123341	25HBS348(A,G)60	CAR**4824A**	58MEB120–20	45500	11.1	13.20	46500	3.46	7.9	29400	2.56
3030209	25HBS348(A,G)60	CAR**4824A**	58MV(B,C)120–20	45000	10.8	13.00	46500	3.36	7.7	29600	2.50
3030189	25HBS348(A,G)60	CAR**4824A**	58PH*135–20	45500	11.0	13.00	46500	3.42	7.8	29600	2.54
3030214	25HBS348(A,G)60	CAR**6021A**	58CV(A,X)110–20	46500	11.2	13.50	44500	3.40	7.7	29600	2.56
3123342	25HBS348(A,G)60	CAR**6021A**	58MEB100–20	46500	11.5	13.50	42500	3.36	7.8	29600	2.58
3030212	25HBS348(A,G)60	CAR**6021A**	58MV(B,C)080–20	46000	11.0	13.20	45000	3.36	7.7	29600	2.52
3030213	25HBS348(A,G)60	CAR**6021A**	58MV(B,C)100–20	46000	11.0	13.20	44500	3.38	7.7	29600	2.54
3030216	25HBS348(A,G)60	CAR**6024A**	58CV(A,X)135–22	46500	11.2	13.50	44500	3.42	7.9	29400	2.58
3030217	25HBS348(A,G)60	CAR**6024A**	58CV(A,X)155–22	46500	11.2	13.50	44000	3.42	8.0	29400	2.58
3123343	25HBS348(A,G)60	CAR**6024A**	58MEB120–20	46500	11.5	13.50	42500	3.38	7.8	29600	2.58
3030215	25HBS348(A,G)60	CAR**6024A**	58MV(B,C)120–20	46000	11.0	13.20	45000	3.38	7.7	29600	2.54
3030228	25HBS348(A,G)60	CNRH*4821A**	58CV(A,X)090–16	45000	10.8	13.00	46500	3.38	7.7	29400	2.52
3030229	25HBS348(A,G)60	CNRH*4821A**	58CV(A,X)110–20	45500	11.0	13.20	46500	3.38	7.7	29400	2.52
3030230	25HBS348(A,G)60	CNRH*4821A**	58CV(A,X)135–22	45500	11.0	13.20	46500	3.42	7.7	29200	2.54
3030231	25HBS348(A,G)60	CNRH*4821A**	58CV(A,X)155–22	45500	11.2	13.50	46500	3.44	7.7	29200	2.56
3123347	25HBS348(A,G)60	CNRH*4821A**	58MEB080–16	45500	11.0	13.00	47000	3.38	7.7	29800	2.52
3123348	25HBS348(A,G)60	CNRH*4821A**	58MEB100–20	45500	11.1	13.20	46500	3.42	7.9	29400	2.56
3123349	25HBS348(A,G)60	CNRH*4821A**	58MEB120–20	45500	11.2	13.20	46500	3.44	7.9	29400	2.56
3030226	25HBS348(A,G)60	CNRH*4821A**	58MV(B,C)100–20	45000	10.8	13.00	46500	3.36	7.7	29600	2.52
3030227	25HBS348(A,G)60	CNRH*4821A**	58MV(B,C)120–20	45000	10.8	13.00	46500	3.36	7.7	29400	2.52
3030194	25HBS348(A,G)60	CNRH*4821A**	58PH*090–16	45500	11.0	13.00	47000	3.42	7.8	29600	2.54
3030195	25HBS348(A,G)60	CNRH*4821A**	58PH*110–20	45500	11.0	13.25	46500	3.44	7.8	29400	2.56
3030196	25HBS348(A,G)60	CNRH*4821A**	58PH*135–20	45500	11.0	13.00	46500	3.42	7.8	29400	2.54
3030235	25HBS348(A,G)60	CNRH*6024A**	58CV(A,X)090–16	46000	11.0	13.20	46000	3.44	7.7	29600	2.54
3030236	25HBS348(A,G)60	CNRH*6024A**	58CV(A,X)110–20	46000	11.2	13.50	46000	3.46	7.8	29400	2.56
3030237	25HBS348(A,G)60	CNRH*6024A**	58CV(A,X)135–22	46500	11.2	13.50	46000	3.48	7.8	29400	2.58
3030238	25HBS348(A,G)60	CNRH*6024A**	58CV(A,X)155–22	46500	11.2	13.50	46000	3.50	7.9	29200	2.60
3123350	25HBS348(A,G)60	CNRH*6024A**	58MEB080–16	46500	11.0	13.00	46000	3.42	7.9	30000	2.54
3123351	25HBS348(A,G)60	CNRH*6024A**	58MEB100–20	46500	11.4	13.50	46000	3.48	7.9	29600	2.58
3123352	25HBS348(A,G)60	CNRH*6024A**	58MEB120–20	46500	11.5	13.50	45500	3.50	8.0	29600	2.60
3030232	25HBS348(A,G)60	CNRH*6024A**	58MV(B,C)080–20	46000	11.0	13.20	46500	3.42	7.7	29600	2.52
3030233	25HBS348(A,G)60	CNRH*6024A**	58MV(B,C)100–20	46000	11.0	13.20	46000	3.42	7.7	29600	2.54
3030234	25HBS348(A,G)60	CNRH*6024A**	58MV(B,C)120–20	46000	11.0	13.20	46000	3.42	7.7	29600	2.54
3030197	25HBS348(A,G)60	CNRH*6024A**	58PH*090–16	46500	11.0	13.25	46000	3.46	7.9	29800	2.56
3030198	25HBS348(A,G)60	CNRH*6024A**	58PH*110–20	46500	11.5	13.50	46000	3.50	8.0	29400	2.58
3030199	25HBS348(A,G)60	CNRH*6024A**	58PH*135–20	46500	11.5	13.50	46000	3.48	7.9	29600	2.58
3030219	25HBS348(A,G)60	CNRV*4821A**	58CV(A,X)110–20	45500	11.0	13.20	46500	3.38	7.7	29400	2.52
3123344	25HBS348(A,G)60	CNRV*4821A**	58MEB100–20	45500	11.1	13.20	46500	3.42	7.9	29400	2.56
3030218	25HBS348(A,G)60	CNRV*4821A**	58MV(B,C)100–20	45000	10.8	13.00	46500	3.36	7.7	29600	2.52
3030190	25HBS348(A,G)60	CNRV*4821A**	58PH*090–16	45500	11.0	13.00	47000	3.42	7.8	29600	2.54
3030191	25HBS348(A,G)60	CNRV*4821A**	58PH*110–20	45500	11.0	13.25	46500	3.44	7.8	29400	2.56
3030221	25HBS348(A,G)60	CNRV*4824A**	58CV(A,X)135–22	45500	11.0	13.20	46500	3.42	7.7	29200	2.54
3030222	25HBS348(A,G)60	CNRV*4824A**	58CV(A,X)155–22	45500	11.2	13.50	46500	3.44	7.7	29200	2.56
3123345	25HBS348(A,G)60	CNRV*4824A**	58MEB120–20	45500	11.2	13.20	46500	3.44	7.9	29400	2.56
3030220	25HBS348(A,G)60	CNRV*4824A**	58MV(B,C)120–20	45000	10.8	13.00	46500	3.36	7.7	29400	2.52
3030192	25HBS348(A,G)60	CNRV*4824A**	58PH*135–20	45500	11.0	13.00	46500	3.42	7.8	29400	2.54
3030224	25HBS348(A,G)60	CNRV*6024A**	58CV(A,X)135–22	46500	11.2	13.50	46000	3.48	7.8	29400	2.58
3030225	25HBS348(A,G)60	CNRV*6024A**	58CV(A,X)155–22	46500	11.2	13.50	46000	3.50	7.9	29200	2.60
3123346	25HBS348(A,G)60	CNRV*6024A**	58MEB120–20	46500	11.5	13.50	45500	3.50	8.0	29600	2.60
3030223	25HBS348(A,G)60	CNRV*6024A**	58MV(B,C)120–20	46000	11.0	13.20	46000	3.42	7.7	29600	2.54
3030193	25HBS348(A,G)60	CNRV*6024A**	58PH*135–20	46500	11.5	13.50	46000	3.48	7.9	29600	2.58
3030242	25HBS348(A,G)60	CSRH*4812A**	58CV(A,X)090–16	45500	10.8	13.00	46500	3.40	7.7	29600	2.52
3030243	25HBS348(A,G)60	CSRH*4812A**	58CV(A,X)110–20	45500	11.0	13.20	46500	3.42	7.7	29600	2.54
3030244	25HBS348(A,G)60	CSRH*4812A**	58CV(A,X)135–22	46000	11.0	13.20	46500	3.44	7.7	29400	2.54
3030245	25HBS348(A,G)60	CSRH*4812A**	58CV(A,X)155–22	46000	11.2	13.50	46500	3.46	7.8	29400	2.56
3123353	25HBS348(A,G)60	CSRH*4812A**	58MEB080–16	46000	11.0	13.00	47000	3.42	7.8	30000	2.52
3123354	25HBS348(A,G)60	CSRH*4812A**	58MEB100–20	46000	11.1	13.20	46500	3.44	7.9	29600	2.56
3123355	25HBS348(A,G)60	CSRH*4812A**	58MEB120–20	46000	11.2	13.25	46500	3.46	7.9	29400	2.56
3030239	25HBS348(A,G)60	CSRH*4812A**	58MV(B,C)080–20	45500	10.8	13.00	47000	3.38	7.7	29800	2.50
3030240	25HBS348(A,G)60	CSRH*4812A**	58MV(B,C)100–20	45500	10.8	13.00	47000	3.40	7.7	29600	2.52
3030241	25HBS348(A,G)60	CSRH*4812A**	58MV(B,C)120–20	45500	10.8	13.00	46500	3.38	7.7	29600	2.52
3030200	25HBS348(A,G)60	CSRH*4812A**	58PH*090–16	46000	11.0	13.00	47000	3.44	7.8	29600	2.54
3030201	25HBS348(A,G)60	CSRH*4812A**	58PH*110–20	45500	11.0	13.25	46500	3.44	7.8	29400	2.56
3030202	25HBS348(A,G)60	CSRH*4812A**	58PH*135–20	45500	11.0	13.25	47000	3.44	7.8	29600	2.54
3030250	25HBS348(A,G)60	CSRH*6012A**	58CV(A,X)090–16	46500	11.2	13.50	46000	3.48	7.8	29600	2.56
3030251	25HBS348(A,G)60	CSRH*6012A**	58CV(A,X)110–20	46500	11.2	13.50	46000	3.50	7.8	29600	2.56
3030252	25HBS348(A,G)60	CSRH*6012A**	58CV(A,X)135–22	46500	11.2	13.50	46000	3.52	8.0	29400	2.58
3030253	25HBS348(A,G)60	CSRH*6012A**	58CV(A,X)155–22	47000	11.5	13.50	45500	3.54	8.0	29400	2.60
3123356	25HBS348(A,G)60	CSRH*6012A**	58MEB080–16	47000	11.1	13.20	45500	3.46	7.9	30000	2.56
3123357	25HBS348(A,G)60	CSRH*6012A**	58MEB100–20	47000	11.5	13.50	45500	3.52	8.0	29600	2.60
3123358	25HBS348(A,G)60	CSRH*6012A**	58MEB120–20	47000	11.6	13.50	45500	3.54	8.1	29600	2.60
3030247	25HBS348(A,G)60	CSRH*6012A**	58MV(B,C)080–20	46500	11.2	13.20	46000	3.44	7.7	29800	2.54
3030248	25HBS348(A,G)60	CSRH*6012A**	58MV(B,C)100–20	46500	11.0	13.20	46000	3.46	7.8	29600	2.54
3030249	25HBS348(A,G)60	CSRH*6012A**	58MV(B,C)120–20	46500	11.2	13.50	46000	3.46	7.8	29600	2.54
3030203	25HBS348(A,G)60	CSRH*6012A**	58PH*090–16	47000	11.5	13.50	46000	3.50	8.0	29800	2.58
3030204	25HBS348(A,G)60	CSRH*6012A**	58PH*110–20	47000	11.5	13.50	46000	3.54	8.0	29400	2.60
3030205	25HBS348(A,G)60	CSRH*6012A**	58PH*135–20	47000	11.5	13.50	46000	3.52	8.0	29600	2.58
3030246	25HBS348(A,G)60	CSRH*6012A**+TDR		47000	10.8	13.00	44500	3.36	7.8	30600	2.52
3030287	25HBS360(A,G)31	†FC4DN(F,B)060		56000	11.0	13.00	56000	3.60	7.9	35000	2.54
3030295	25HBS360(A,G)31	FK4DNB006		55500	11.0	13.00	56000	3.62	7.9	34400	2.54
3111431	25HBS360(A,G)31	CAR**6021A**	58MEB100–20	54000	10.8	13.00	54500	3.46	7.6	34400	2.48
3030296	25HBS360(A,G)31	CAR**6021A**	58PH*110–20	55000	11.0	13.00	55000	3.48	7.7	34400	2.48
3030288	25HBS360(A,G)31	CAR**6024A**	58CV(A,X)155–22	55000	11.0	13.00	55500	3.50	7.7	34400	2.50
3111432	25HBS360(A,G)31	CAR**6024A**	58MEB120–20	54500	11.0	13.00	55500	3.48	7.6	34400	2.48
3030291	25HBS360(A,G)31	CNRH*6024A**	58CV(A,X)135–22	55000	11.0	13.00	57000	3.50	7.7	34400	2.48

See notes on page 31

COMBINATION RATINGS CONTINUED

ARI Ref. No.	Model Number	Coil Model Number	Furnace Model Number	Cooling Capacity	EER	SEER	High Temp		HSPF	Low Temp	
							E Capacity	E COP		H Capacity	H COP
3030292	25HBS360(A,G)31	CNRH*6024A**	58CV(A,X)155−22	55000	11.0	13.00	56500	3.54	7.7	34200	2.50
3111434	25HBS360(A,G)31	CNRH*6024A**	58MEB100−20	54000	10.7	13.00	57000	3.48	7.6	34400	2.46
3111435	25HBS360(A,G)31	CNRH*6024A**	58MEB120−20	54000	11.0	13.00	56500	3.50	7.7	34200	2.48
3030297	25HBS360(A,G)31	CNRH*6024A**	58PH*110−20	55000	11.0	13.00	57000	3.52	7.7	34400	2.48
3030289	25HBS360(A,G)31	CNRV*6024A**	58CV(A,X)135−22	55000	11.0	13.00	57000	3.50	7.7	34400	2.48
3030290	25HBS360(A,G)31	CNRV*6024A**	58CV(A,X)155−22	55000	11.0	13.00	56500	3.54	7.7	34200	2.50
3111433	25HBS360(A,G)31	CNRV*6024A**	58MEB120−20	54000	11.0	13.00	56500	3.50	7.7	34200	2.48
3030293	25HBS360(A,G)31	CSRH*6012A**	58CV(A,X)135−22	55000	11.0	13.00	57000	3.58	7.8	34400	2.50
3030294	25HBS360(A,G)31	CSRH*6012A**	58CV(A,X)155−22	55000	11.0	13.00	56500	3.60	7.8	34400	2.52
3111436	25HBS360(A,G)31	CSRH*6012A**	58MEB100−20	54500	11.0	13.00	57000	3.54	7.7	34400	2.48
3111437	25HBS360(A,G)31	CSRH*6012A**	58MEB120−20	54500	11.0	13.00	56500	3.58	7.8	34400	2.50
3030298	25HBS360(A,G)31	CSRH*6012A**	58PH*110−20	55000	11.0	13.00	57000	3.58	7.8	34400	2.50
3030299	25HBS360(A,G)31	CSRH*6012A**	58PH*135−20	55000	11.0	13.00	57000	3.56	7.7	34400	2.48
3030300	25HBS360(A,G)51	†FC4DN(F,B)060		56000	11.0	13.00	56000	3.60	7.9	35000	2.54
3030308	25HBS360(A,G)51	FK4DNB006		55500	11.0	13.00	56000	3.62	7.9	34400	2.54
3123267	25HBS360(A,G)51	CAR**6021A**	58MEB100−20	54000	10.8	13.00	54500	3.46	7.6	34400	2.48
3030309	25HBS360(A,G)51	CAR**6021A**	58PH*110−20	55000	11.0	13.00	55000	3.48	7.7	34400	2.48
3030301	25HBS360(A,G)51	CAR**6024A**	58CV(A,X)155−22	55000	11.0	13.00	55500	3.50	7.7	34400	2.50
3123268	25HBS360(A,G)51	CAR**6024A**	58MEB120−20	54500	11.0	13.00	55500	3.48	7.6	34400	2.48
3030304	25HBS360(A,G)51	CNRH*6024A**	58CV(A,X)135−22	55000	11.0	13.00	57000	3.50	7.7	34400	2.48
3030305	25HBS360(A,G)51	CNRH*6024A**	58CV(A,X)155−22	55000	11.0	13.00	56500	3.54	7.7	34200	2.50
3123270	25HBS360(A,G)51	CNRH*6024A**	58MEB100−20	54000	10.7	13.00	57000	3.48	7.6	34400	2.46
3123271	25HBS360(A,G)51	CNRH*6024A**	58MEB120−20	54000	11.0	13.00	56500	3.50	7.7	34200	2.48
3030310	25HBS360(A,G)51	CNRH*6024A**	58PH*110−20	55000	11.0	13.00	57000	3.52	7.7	34400	2.48
3030302	25HBS360(A,G)51	CNRV*6024A**	58CV(A,X)135−22	55000	11.0	13.00	57000	3.50	7.7	34400	2.48
3030303	25HBS360(A,G)51	CNRV*6024A**	58CV(A,X)155−22	55000	11.0	13.00	56500	3.54	7.7	34200	2.50
3123269	25HBS360(A,G)51	CNRV*6024A**	58MEB120−20	54000	11.0	13.00	56500	3.50	7.7	34200	2.48
3030306	25HBS360(A,G)51	CSRH*6012A**	58CV(A,X)135−22	55000	11.0	13.00	57000	3.58	7.8	34400	2.50
3030307	25HBS360(A,G)51	CSRH*6012A**	58CV(A,X)155−22	55000	11.0	13.00	56500	3.60	7.8	34400	2.52
3123272	25HBS360(A,G)51	CSRH*6012A**	58MEB100−20	54500	11.0	13.00	57000	3.54	7.7	34400	2.48
3123273	25HBS360(A,G)51	CSRH*6012A**	58MEB120−20	54500	11.0	13.00	56500	3.58	7.8	34400	2.50
3030311	25HBS360(A,G)51	CSRH*6012A**	58PH*110−20	55000	11.0	13.00	57000	3.58	7.8	34400	2.50
3030312	25HBS360(A,G)51	CSRH*6012A**	58PH*135−20	55000	11.0	13.00	57000	3.56	7.7	34400	2.48
3030313	25HBS360(A,G)61	†FC4DN(F,B)060		56000	11.0	13.00	56000	3.60	7.9	35000	2.54
3030321	25HBS360(A,G)61	FK4DNB006		55500	11.0	13.00	56000	3.62	7.9	34400	2.54
3030322	25HBS360(A,G)61	CAR**6021A**	58PH*110−20	55000	11.0	13.00	55000	3.48	7.7	34400	2.48
3030314	25HBS360(A,G)61	CAR**6024A**	58CV(A,X)155−22	55000	11.0	13.00	55500	3.50	7.7	34400	2.50
3030317	25HBS360(A,G)61	CNRH*6024A**	58CV(A,X)135−22	55000	11.0	13.00	57000	3.50	7.7	34400	2.48
3030318	25HBS360(A,G)61	CNRH*6024A**	58CV(A,X)155−22	55000	11.0	13.00	56500	3.54	7.7	34200	2.50
3030323	25HBS360(A,G)61	CNRH*6024A**	58PH*110−20	55000	11.0	13.00	57000	3.52	7.7	34400	2.48
3030315	25HBS360(A,G)61	CNRV*6024A**	58CV(A,X)135−22	55000	11.0	13.00	57000	3.50	7.7	34400	2.48
3030316	25HBS360(A,G)61	CNRV*6024A**	58CV(A,X)155−22	55000	11.0	13.00	56500	3.54	7.7	34200	2.50
3030319	25HBS360(A,G)61	CSRH*6012A**	58CV(A,X)135−22	55000	11.0	13.00	57000	3.58	7.8	34400	2.50
3030320	25HBS360(A,G)61	CSRH*6012A**	58CV(A,X)155−22	55000	11.0	13.00	56500	3.60	7.8	34400	2.52
3030324	25HBS360(A,G)61	CSRH*6012A**	58PH*110−20	55000	11.0	13.00	57000	3.58	7.8	34400	2.50
3030325	25HBS360(A,G)61	CSRH*6012A**	58PH*135−20	55000	11.0	13.00	57000	3.56	7.7	34400	2.48

* Ratings are net values reflecting the effects of circulating fan heat. Supplemental electric heat is not included. Ratings are based on:
Cooling Standard: 80°F (27°C) db 67°F (19°C) wb indoor entering air temperature and 95°F (35°C) db air entering outdoor unit.
High−Temp Heating Standard: 70°F (21°C) db indoor entering air temperature and 47°F (8°C) db 43°F (6°C) wb air entering outdoor unit.
Low−Temp Heating Standard: 70°F (21°C) db indoor entering air temperature and 17°F (−9°C) db 15°F (−10°C) wb air entering outdoor unit.

SEER — Seasonal Energy Efficiency Ratio
COP — Coefficient of Performance
TDR — Time−Delay Relay
HSPF — Heating Seasonal Performance Factor
EER — Energy Efficiency Ratio

DETAILED COOLING CAPACITIES

EVAPORATOR AIR		CONDENSER ENTERING AIR TEMPERATURES °F (°C)																	
		75 (23.9)			85 (29.4)			95 (35)			105 (40.6)			115 (46.1)			125 (51.7)		
CFM	EWB °F (°C)	Capacity MBtuh		Total System KW**	Capacity MBtuh		Total System KW**	Capacity MBtuh		Total System KW**	Capacity MBtuh		Total System KW**	Capacity MBtuh		Total System KW**	Capacity MBtuh		Total System KW**
		Total	Sens‡		Total	Sens‡		Total	Sens‡		Total	Sens‡		Total	Sens‡		Total	Sens‡	
25HBS318(A,G)30 Outdoor Section With FA4CNF018 Indoor Section																			
525	72 (22.2)	20.06	10.33	1.19	19.34	10.06	1.33	18.59	9.77	1.48	17.79	9.46	1.65	16.96	9.15	1.84	16.08	8.83	2.05
	67 (19.4)	18.25	12.89	1.19	17.57	12.59	1.33	16.85	12.28	1.48	16.09	11.97	1.65	15.30	11.64	1.83	14.49	11.30	2.04
	63 (17.2)††	16.94	12.44	1.19	16.28	12.14	1.32	15.59	11.82	1.47	14.88	11.50	1.64	14.13	11.16	1.83	13.35	10.82	2.03
	62 (16.7)	16.64	15.38	1.18	16.00	15.05	1.32	15.35	14.70	1.47	14.67	14.33	1.64	13.95	13.95	1.83	13.32	13.32	2.03
	57 (13.9)	16.16	16.16	1.18	15.64	15.64	1.32	15.10	15.10	1.47	14.53	14.53	1.64	13.94	13.94	1.83	13.32	13.32	2.03
600	72 (22.2)	20.39	10.80	1.22	19.65	10.52	1.36	18.87	10.23	1.51	18.05	9.92	1.68	17.19	9.61	1.87	16.29	9.28	2.08
	67 (19.4)	18.55	13.67	1.22	17.84	13.37	1.36	17.10	13.06	1.51	16.32	12.74	1.68	15.51	12.40	1.86	14.67	12.05	2.07
	63 (17.2)††	17.22	13.17	1.21	16.55	12.87	1.35	15.84	12.55	1.50	15.09	12.21	1.67	14.32	11.87	1.86	13.53	11.51	2.06
	62 (16.7)	16.98	16.37	1.21	16.34	16.01	1.35	15.66	15.66	1.50	15.04	15.04	1.67	14.41	14.41	1.86	13.76	13.76	2.06
	57 (13.9)	16.75	16.75	1.21	16.21	16.21	1.35	15.64	15.64	1.50	15.04	15.04	1.67	14.42	14.42	1.86	13.76	13.76	2.06
675	72 (22.2)	20.63	11.24	1.25	19.87	10.95	1.39	19.07	10.66	1.54	18.23	10.35	1.71	17.35	10.04	1.90	16.43	9.70	2.11
	67 (19.4)	18.77	14.41	1.25	18.05	14.11	1.38	17.28	13.79	1.54	16.49	13.46	1.71	15.66	13.12	1.89	14.80	12.76	2.10
	63 (17.2)††	17.44	13.87	1.24	16.74	13.55	1.38	16.01	13.23	1.53	15.25	12.89	1.70	14.47	12.53	1.89	13.65	12.16	2.09
	62 (16.7)	17.27	17.27	1.24	16.67	16.67	1.38	16.08	16.08	1.53	15.46	15.46	1.70	14.80	14.80	1.89	14.12	14.12	2.09
	57 (13.9)	17.24	17.24	1.24	16.68	16.68	1.38	16.08	16.08	1.53	15.46	15.46	1.70	14.81	14.81	1.89	14.13	14.13	2.09

COOLING INDOOR MODEL	CAPACITY	POWER	FURNACE MODEL
*FA4CN(F,C)018	1.00	1.00	
FA4CN(F,C)024	1.01	1.01	
FC4DNF018	1.02	0.94	
FC4DNF024	1.03	0.93	
FF1ENE018	1.00	1.00	
FF1ENE024	1.01	1.01	
FK4DNF001	1.02	0.92	
FK4DNF002	1.04	0.89	
CAR**1814A**	0.99	0.99	
CAR**2414A**	1.02	1.02	
CAR**2417A**	1.02	1.02	
CNRF*2418A**	1.02	1.02	
CNRH*2417A**	1.02	1.02	
CNRV*1814A**	0.99	0.99	
CNRV*2414A**	1.02	1.02	
CNRV*2417A**	1.02	1.02	
CSRH*2412A**	1.02	1.02	
CAR**1814A**	0.99	0.91	58CV(A,X)070–12
CAR**2414A**	1.01	0.91	58CV(A,X)070–12
CNRH*2417A**	1.02	0.92	58CV(A,X)070–12
CNRV*1814A**	0.99	0.89	58CV(A,X)070–12
CNRV*2414A**	1.01	0.91	58CV(A,X)070–12
CSRH*2412A**	1.01	0.91	58CV(A,X)070–12
CAR**2417A**	1.02	0.92	58CV(A,X)090–16
CNRH*2417A**	1.02	0.92	58CV(A,X)090–16
CNRV*2417A**	1.02	0.92	58CV(A,X)090–16
CSRH*2412A**	1.02	0.92	58CV(A,X)090–16
CAR**2417A**	1.05	0.87	58MEB040–12
CNRH*2417A**	1.05	0.87	58MEB040–12
CNRV*2417A**	1.05	0.87	58MEB040–12
CSRH*2412A**	1.05	0.87	58MEB040–12
CAR**2417A**	1.04	0.86	58MEB060–12
CNRH*2417A**	1.03	0.86	58MEB060–12
CNRV*2417A**	1.03	0.86	58MEB060–12
CSRH*2412A**	1.03	0.86	58MEB060–12
CNRH*2417A**	1.01	0.91	58MV(B,C)040–14
CSRH*2412A**	1.01	0.91	58MV(B,C)040–14
CAR**2417A**	1.01	0.91	58MV(B,C)060–14
CNRH*2417A**	1.01	0.91	58MV(B,C)060–14

COOLING INDOOR MODEL	CAPACITY	POWER	FURNACE MODEL
CNRV*2417A**	1.01	0.91	58MV(B,C)060–14
CSRH*2412A**	1.01	0.91	58MV(B,C)060–14
CNRH*2417A**	1.02	0.92	58MV(B,C)080–14
CSRH*2412A**	1.02	0.92	58MV(B,C)080–14
CAR**1814A**	1.00	0.89	58PH*045–08
CNRV*1814A**	1.02	0.90	58PH*045–08

See notes on pg. 41

DETAILED COOLING CAPACITIES - CONTINUED

EVAPORATOR AIR		CONDENSER ENTERING AIR TEMPERATURES °F (°C)																	
		75 (23.9)			85 (29.4)			95 (35)			105 (40.6)			115 (46.1)			125 (51.7)		
CFM	EWB °F (°C)	Capacity MBtuh		Total System KW**	Capacity MBtuh		Total System KW**	Capacity MBtuh		Total System KW**	Capacity MBtuh		Total System KW**	Capacity MBtuh		Total System KW**	Capacity MBtuh		Total System KW**
		Total	Sens‡		Total	Sens‡		Total	Sens‡		Total	Sens‡		Total	Sens‡		Total	Sens‡	
25HBS324(A,G)30 Outdoor Section With FA4CNC024 Indoor Section																			
700	72 (22.2)	26.55	13.79	1.69	25.58	13.41	1.88	24.57	13.03	2.08	23.52	12.63	2.31	22.41	12.22	2.57	21.24	11.79	2.84
	67 (19.4)	24.11	17.20	1.67	23.20	16.81	1.86	22.26	16.42	2.07	21.27	16.00	2.30	20.24	15.57	2.55	19.15	15.12	2.82
	63 (17.2)††	22.37	16.59	1.66	21.51	16.20	1.85	20.61	15.80	2.06	19.67	15.37	2.28	18.69	14.93	2.53	17.65	14.47	2.80
	62 (16.7)	22.00	20.58	1.66	21.18	20.15	1.85	20.32	19.70	2.05	19.44	19.21	2.28	18.57	18.57	2.53	17.73	17.73	2.80
	57 (13.9)	21.50	21.50	1.66	20.82	20.82	1.85	20.11	20.11	2.05	19.36	19.36	2.28	18.57	18.57	2.53	17.73	17.73	2.80
800	72 (22.2)	27.00	14.44	1.73	25.99	14.06	1.91	24.95	13.67	2.12	23.86	13.27	2.35	22.71	12.85	2.61	21.51	12.42	2.88
	67 (19.4)	24.52	18.28	1.71	23.58	17.89	1.90	22.60	17.49	2.11	21.58	17.07	2.34	20.51	16.62	2.59	19.40	16.16	2.86
	63 (17.2)††	22.75	17.61	1.70	21.86	17.21	1.89	20.93	16.80	2.10	19.97	16.36	2.32	18.95	15.91	2.57	17.89	15.44	2.84
	62 (16.7)	22.48	21.96	1.70	21.64	21.50	1.89	20.83	20.83	2.09	20.04	20.04	2.32	19.21	19.21	2.57	18.34	18.34	2.84
	57 (13.9)	22.30	22.30	1.70	21.59	21.59	1.89	20.83	20.83	2.09	20.05	20.05	2.32	19.21	19.21	2.57	18.34	18.34	2.84
900	72 (22.2)	27.33	15.05	1.77	26.29	14.68	1.95	25.22	14.29	2.16	24.10	13.88	2.39	22.93	13.46	2.65	21.69	13.02	2.92
	67 (19.4)	24.82	19.32	1.75	23.85	18.92	1.94	22.85	18.51	2.15	21.81	18.07	2.37	20.72	17.62	2.62	19.58	17.15	2.90
	63 (17.2)††	23.03	18.57	1.74	22.12	18.16	1.93	21.17	17.74	2.13	20.18	17.30	2.36	19.15	16.84	2.61	18.07	16.35	2.88
	62 (16.7)	22.97	22.97	1.74	22.22	22.22	1.93	21.43	21.43	2.14	20.61	20.61	2.37	19.74	19.74	2.62	18.83	18.83	2.89
	57 (13.9)	22.97	22.97	1.74	22.22	22.22	1.93	21.44	21.44	2.14	20.61	20.61	2.37	19.75	19.75	2.62	18.83	18.83	2.89

COOLING INDOOR MODEL	CAPACITY	POWER	FURNACE MODEL
*FA4CN(F,C)024	1.00	1.00	
FA4CN(F,C)030	1.01	1.01	
FC4DNF024	1.02	0.96	
FC4DNF030	1.03	0.96	
FF1ENE030	1.00	1.02	
FK4DN(B,F)003	1.03	0.95	
FK4DNF001	1.02	0.94	
FK4DNF002	1.03	0.95	
CAR**2414A**	1.01	1.01	
CAR**2417A**	1.01	1.01	
CAR**3014A**	1.01	1.01	
CAR**3017A**	1.01	1.01	
CNRF*2418A**	1.01	1.01	
CNRH*2417A**	1.01	1.01	
CNRH*3017A**	1.01	1.01	
CNRV*2414A**	1.01	1.01	
CNRV*2417A**	1.01	1.01	
CNRV*3014A**	1.01	1.01	
CNRV*3017A**	1.01	1.01	
CSRH*2412A**	1.01	1.01	
CSRH*3012A**	1.01	1.01	
CAR**2414A**	1.01	0.95	58CV(A,X)070–12
CAR**3014A**	1.01	0.95	58CV(A,X)070–12
CNRH*2417A**	1.00	0.94	58CV(A,X)070–12
CNRH*3017A**	1.01	0.93	58CV(A,X)070–12
CNRV*2414A**	1.00	0.94	58CV(A,X)070–12
CNRV*3014A**	1.01	0.95	58CV(A,X)070–12
CSRH*2412A**	1.01	0.95	58CV(A,X)070–12
CSRH*3012A**	1.01	0.93	58CV(A,X)070–12
CAR**2417A**	1.01	0.93	58CV(A,X)090–16
CAR**3017A**	1.02	0.94	58CV(A,X)090–16
CNRH*2417A**	1.01	0.95	58CV(A,X)090–16
CNRH*3017A**	1.02	0.94	58CV(A,X)090–16
CNRV*2417A**	1.01	0.95	58CV(A,X)090–16
CNRV*3017A**	1.02	0.94	58CV(A,X)090–16
CSRH*2412A**	1.01	0.93	58CV(A,X)090–16
CSRH*3012A**	1.01	0.93	58CV(A,X)090–16
CNRH*2417A**	1.01	0.95	58CV(A,X)110–20
CNRH*3017A**	1.02	0.94	58CV(A,X)110–20

COOLING INDOOR MODEL	CAPACITY	POWER	FURNACE MODEL
CSRH*2412A**	1.01	0.95	58CV(A,X)110–20
CSRH*3012A**	1.01	0.93	58CV(A,X)110–20
CNRH*2417A**	1.01	0.95	58CV(A,X)135–22
CNRH*3017A**	1.02	0.94	58CV(A,X)135–22
CSRH*2412A**	1.01	0.95	58CV(A,X)135–22
CSRH*3012A**	1.01	0.93	58CV(A,X)135–22
CNRH*2417A**	1.01	0.95	58CV(A,X)155–22
CNRH*3017A**	1.02	0.94	58CV(A,X)155–22
CSRH*2412A**	1.01	0.93	58CV(A,X)155–22
CSRH*3012A**	1.01	0.93	58CV(A,X)155–22
CAR**2417A**	1.03	0.92	58MEB040–12
CAR**3017A**	1.04	0.93	58MEB040–12
CNRH*2417A**	1.02	0.92	58MEB040–12
CNRH*3017A**	1.04	0.93	58MEB040–12
CNRV*2417A**	1.02	0.92	58MEB040–12
CNRV*3017A**	1.04	0.93	58MEB040–12
CSRH*2412A**	1.04	0.93	58MEB040–12
CSRH*3012A**	1.04	0.93	58MEB040–12
CAR**2417A**	1.03	0.92	58MEB060–12
CAR**3017A**	1.04	0.93	58MEB060–12
CNRH*2417A**	1.02	0.92	58MEB060–12
CNRH*3017A**	1.04	0.93	58MEB060–12
CNRV*2417A**	1.02	0.92	58MEB060–12
CNRV*3017A**	1.04	0.93	58MEB060–12
CSRH*2412A**	1.04	0.93	58MEB060–12
CSRH*3012A**	1.04	0.93	58MEB060–12
CAR**2417A**	1.03	0.92	58MEB080–12
CAR**3017A**	0.99	0.89	58MEB080–12
CNRH*2417A**	1.02	0.92	58MEB080–12
CNRH*3017A**	1.04	0.93	58MEB080–12
CNRV*2417A**	1.02	0.92	58MEB080–12
CNRV*3017A**	1.04	0.93	58MEB080–12
CSRH*2412A**	1.02	0.92	58MEB080–12
CSRH*3012A**	1.04	0.93	58MEB080–12
CNRH*2417A**	1.01	0.95	58MV(B,C)040–14
CNRH*3017A**	1.01	0.93	58MV(B,C)040–14
CSRH*2412A**	1.01	0.95	58MV(B,C)040–14
CSRH*3012A**	1.01	0.93	58MV(B,C)040–14
CAR**2417A**	1.01	0.95	58MV(B,C)060–14

COOLING INDOOR MODEL	CAPACITY	POWER	FURNACE MODEL
CAR**3017A**	1.01	0.93	58MV(B,C)060–14
CNRH*2417A**	1.01	0.95	58MV(B,C)060–14
CNRH*3017A**	1.01	0.93	58MV(B,C)060–14
CNRV*2417A**	1.01	0.95	58MV(B,C)060–14
CNRV*3017A**	1.01	0.93	58MV(B,C)060–14
CSRH*2412A**	1.01	0.95	58MV(B,C)060–14
CSRH*3012A**	1.01	0.93	58MV(B,C)060–14
CNRH*2417A**	1.01	0.95	58MV(B,C)080–14
CNRH*3017A**	1.01	0.93	58MV(B,C)080–14
CSRH*2412A**	1.01	0.95	58MV(B,C)080–14
CSRH*3012A**	1.01	0.93	58MV(B,C)080–14
CNRH*2417A**	1.01	0.95	58MV(B,C)080–20
CNRH*3017A**	1.01	0.93	58MV(B,C)080–20
CSRH*2412A**	1.01	0.95	58MV(B,C)080–20
CSRH*3012A**	1.01	0.93	58MV(B,C)080–20
CNRH*2417A**	1.01	0.95	58MV(B,C)100–20
CNRH*3017A**	1.01	0.93	58MV(B,C)100–20
CSRH*2412A**	1.01	0.95	58MV(B,C)100–20
CSRH*3012A**	1.01	0.93	58MV(B,C)100–20
CNRH*2417A**	1.00	0.94	58MV(B,C)120–20
CNRH*3017A**	1.01	0.93	58MV(B,C)120–20
CSRH*2412A**	1.01	0.95	58MV(B,C)120–20
CSRH*3012A**	1.01	0.93	58MV(B,C)120–20
CAR**2414A**	1.01	0.95	58PH*045–08
CNRH*2417A**	1.01	0.95	58PH*045–08
CNRV*2414A**	1.01	0.95	58PH*045–08

See notes on pg. 41

DETAILED COOLING CAPACITIES - CONTINUED

EVAPORATOR AIR		CONDENSER ENTERING AIR TEMPERATURES °F (°C)																	
		75 (23.9)			85 (29.4)			95 (35)			105 (40.6)			115 (46.1)			125 (51.7)		
CFM	EWB °F (°C)	Capacity MBtuh		Total System KW**	Capacity MBtuh		Total System KW**	Capacity MBtuh		Total System KW**	Capacity MBtuh		Total System KW**	Capacity MBtuh		Total System KW**	Capacity MBtuh		Total System KW**
		Total	Sens‡		Total	Sens‡		Total	Sens‡		Total	Sens‡		Total	Sens‡		Total	Sens‡	
25HBS330(A,G)30 Outdoor Section With FA4CNF030 Indoor Section																			
875	72 (22.2)	33.50	17.16	2.08	32.17	16.64	2.33	30.80	16.11	2.60	29.39	15.58	2.90	27.93	15.03	3.23	26.40	14.46	3.59
	67 (19.4)	30.45	21.24	2.09	29.23	20.71	2.33	27.96	20.17	2.60	26.66	19.62	2.90	25.30	19.05	3.23	23.88	18.46	3.58
	63 (17.2)††	28.25	20.51	2.09	27.10	19.98	2.33	25.91	19.44	2.60	24.68	18.88	2.90	23.40	18.30	3.22	22.06	17.70	3.57
	62 (16.7)	27.76	25.27	2.09	26.65	24.71	2.33	25.51	24.12	2.60	24.34	23.49	2.90	23.14	22.81	3.22	21.95	21.95	3.57
	57 (13.9)	26.84	26.84	2.09	25.94	25.94	2.33	25.01	25.01	2.60	24.04	24.04	2.90	23.02	23.02	3.22	21.95	21.95	3.57
1000	72 (22.2)	34.09	17.92	2.13	32.70	17.40	2.37	31.27	16.86	2.65	29.82	16.32	2.95	28.31	15.76	3.28	26.73	15.18	3.63
	67 (19.4)	31.00	22.51	2.13	29.72	21.97	2.38	28.40	21.42	2.65	27.06	20.86	2.95	25.65	20.28	3.27	24.19	19.67	3.62
	63 (17.2)††	28.77	21.70	2.13	27.57	21.16	2.38	26.33	20.61	2.65	25.06	20.04	2.95	23.74	19.44	3.27	22.36	18.83	3.62
	62 (16.7)	28.35	26.94	2.13	27.22	26.32	2.38	26.07	25.65	2.65	24.90	24.90	2.95	23.81	23.81	3.27	22.68	22.68	3.62
	57 (13.9)	27.86	27.86	2.13	26.91	26.91	2.38	25.92	25.92	2.65	24.89	24.89	2.95	23.82	23.82	3.27	22.69	22.69	3.62
1125	72 (22.2)	34.54	18.65	2.17	33.11	18.12	2.42	31.63	17.57	2.69	30.14	17.03	2.99	28.58	16.46	3.32	26.96	15.88	3.68
	67 (19.4)	31.42	23.74	2.18	30.10	23.19	2.42	28.74	22.63	2.69	27.35	22.05	2.99	25.92	21.45	3.32	24.43	20.83	3.67
	63 (17.2)††	29.16	22.85	2.18	27.93	22.30	2.42	26.66	21.73	2.69	25.36	21.15	2.99	24.00	20.54	3.31	22.59	19.90	3.66
	62 (16.7)	28.88	28.40	2.18	27.73	27.73	2.42	26.66	26.66	2.69	25.59	25.59	2.99	24.47	24.47	3.32	23.28	23.28	3.67
	57 (13.9)	28.70	28.70	2.18	27.70	27.70	2.42	26.67	26.67	2.69	25.60	25.60	2.99	24.47	24.47	3.32	23.29	23.29	3.67

COOLING INDOOR MODEL	CAPACITY	POWER	FURNACE MODEL
*FA4CN(F,C)030	1.00	1.00	
FC4DN(F,B)036	1.01	0.98	
FC4DNF030	1.01	0.97	
FF1ENE030	0.99	1.02	
FF1ENE036	1.01	1.01	
FK4DN(B,F)003	1.01	0.94	
FK4DN(B,F)005	1.05	0.94	
FK4DNF001	1.00	0.96	
FK4DNF002	1.01	0.95	
CAR**3014A**	1.01	1.04	
CAR**3017A**	1.01	1.04	
CAR**3614A**	1.00	1.03	
CAR**3617A**	1.01	1.04	
CAR**3621A**	1.01	1.04	
CNRF*3618A**	1.01	1.04	
CNRH*3017A**	1.01	1.04	
CNRH*3617A**	1.01	1.04	
CNRV*3014A**	1.01	1.04	
CNRV*3017A**	1.01	1.04	
CNRV*3617A**	1.01	1.04	
CNRV*3621A**	1.01	1.04	
CSRH*3012A**	1.01	1.04	
CSRH*3612A**	1.00	1.00	
CAR**3014A**	1.00	0.96	58CV(A,X)070–12
CAR**3614A**	1.00	0.94	58CV(A,X)070–12
CNRH*3017A**	1.00	0.94	58CV(A,X)070–12
CNRH*3617A**	1.00	0.94	58CV(A,X)070–12
CNRV*3014A**	1.00	0.96	58CV(A,X)070–12
CSRH*3012A**	1.00	0.94	58CV(A,X)070–12
CSRH*3612A**	1.01	0.95	58CV(A,X)070–12
CAR**3017A**	1.00	0.94	58CV(A,X)090–16
CAR**3617A**	1.01	0.95	58CV(A,X)090–16
CNRH*3017A**	1.00	0.94	58CV(A,X)090–16
CNRH*3617A**	1.00	0.94	58CV(A,X)090–16
CNRV*3017A**	1.00	0.94	58CV(A,X)090–16
CNRV*3617A**	1.00	0.94	58CV(A,X)090–16
CSRH*3012A**	1.00	0.94	58CV(A,X)090–16
CSRH*3612A**	1.01	0.93	58CV(A,X)090–16
CAR**3621A**	1.01	0.95	58CV(A,X)110–20

COOLING INDOOR MODEL	CAPACITY	POWER	FURNACE MODEL
CNRH*3017A**	1.01	0.95	58CV(A,X)110–20
CNRH*3617A**	1.01	0.95	58CV(A,X)110–20
CNRV*3621A**	1.01	0.95	58CV(A,X)110–20
CSRH*3012A**	1.00	0.94	58CV(A,X)110–20
CSRH*3612A**	1.01	0.93	58CV(A,X)110–20
CNRH*3017A**	1.01	0.95	58CV(A,X)135–22
CNRH*3617A**	1.01	0.95	58CV(A,X)135–22
CSRH*3012A**	1.01	0.95	58CV(A,X)135–22
CSRH*3612A**	1.01	0.93	58CV(A,X)135–22
CNRH*3017A**	1.01	0.95	58CV(A,X)155–22
CNRH*3617A**	1.01	0.95	58CV(A,X)155–22
CSRH*3012A**	1.01	0.95	58CV(A,X)155–22
CSRH*3612A**	1.01	0.93	58CV(A,X)155–22
CAR**3017A**	1.01	0.94	58MEB040–12
CAR**3617A**	1.02	0.94	58MEB040–12
CNRH*3017A**	1.01	0.94	58MEB040–12
CNRH*3617A**	1.01	0.94	58MEB040–12
CNRV*3017A**	1.01	0.94	58MEB040–12
CNRV*3617A**	1.01	0.94	58MEB040–12
CSRH*3012A**	1.01	0.94	58MEB040–12
CSRH*3612A**	1.04	0.94	58MEB040–12
CAR**3017A**	1.01	0.94	58MEB060–12
CAR**3617A**	1.02	0.94	58MEB060–12
CNRH*3017A**	1.01	0.94	58MEB060–12
CNRH*3617A**	1.01	0.94	58MEB060–12
CNRV*3017A**	1.01	0.94	58MEB060–12
CNRV*3617A**	1.01	0.94	58MEB060–12
CSRH*3012A**	1.02	0.95	58MEB060–12
CSRH*3612A**	1.01	0.91	58MEB060–12
CAR**3017A**	1.01	0.94	58MEB080–12
CAR**3617A**	1.01	0.94	58MEB080–12
CNRH*3017A**	1.01	0.94	58MEB080–12
CNRH*3617A**	1.01	0.94	58MEB080–12
CNRV*3017A**	1.01	0.94	58MEB080–12
CNRV*3617A**	1.01	0.94	58MEB080–12
CSRH*3012A**	1.01	0.94	58MEB080–12
CSRH*3612A**	1.01	0.91	58MEB080–12
CAR**3017A**	1.02	0.95	58MEB080–16
CAR**3617A**	1.02	0.95	58MEB080–16

COOLING INDOOR MODEL	CAPACITY	POWER	FURNACE MODEL
CNRH*3017A**	1.02	0.96	58MEB080–16
CNRH*3617A**	1.02	0.96	58MEB080–16
CNRV*3017A**	1.02	0.96	58MEB080–16
CNRV*3617A**	1.02	0.96	58MEB080–16
CSRH*3012A**	1.02	0.96	58MEB080–16
CSRH*3612A**	1.05	0.94	58MEB080–16
CNRH*3017A**	1.00	0.94	58MV(B,C)040–14
CNRH*3617A**	1.00	0.94	58MV(B,C)040–14
CSRH*3012A**	1.00	0.94	58MV(B,C)040–14
CSRH*3612A**	1.01	0.95	58MV(B,C)040–14
CAR**3017A**	1.00	0.94	58MV(B,C)060–14
CAR**3617A**	1.00	0.94	58MV(B,C)060–14
CNRH*3017A**	1.00	0.94	58MV(B,C)060–14
CNRH*3617A**	1.00	0.94	58MV(B,C)060–14
CNRV*3017A**	1.00	0.94	58MV(B,C)060–14
CNRV*3617A**	1.00	0.94	58MV(B,C)060–14
CSRH*3012A**	1.00	0.94	58MV(B,C)060–14
CSRH*3612A**	1.01	0.93	58MV(B,C)060–14
CAR**3621A**	1.01	0.95	58MV(B,C)080–14
CNRH*3017A**	1.00	0.94	58MV(B,C)080–14
CNRH*3617A**	1.00	0.94	58MV(B,C)080–14
CNRV*3621A**	1.00	0.94	58MV(B,C)080–14
CSRH*3012A**	1.00	0.94	58MV(B,C)080–14
CSRH*3612A**	1.01	0.93	58MV(B,C)080–14
CAR**3621A**	1.01	0.95	58MV(B,C)080–20
CNRH*3017A**	1.00	0.94	58MV(B,C)080–20
CNRH*3617A**	1.00	0.94	58MV(B,C)080–20
CNRV*3621A**	1.00	0.94	58MV(B,C)080–20
CSRH*3012A**	1.00	0.94	58MV(B,C)080–20
CSRH*3612A**	1.01	0.93	58MV(B,C)080–20
CAR**3621A**	1.01	0.95	58MV(B,C)100–20
CNRH*3017A**	1.00	0.94	58MV(B,C)100–20
CNRH*3617A**	1.00	0.94	58MV(B,C)100–20
CNRV*3621A**	1.00	0.94	58MV(B,C)100–20
CSRH*3012A**	1.00	0.94	58MV(B,C)100–20
CSRH*3612A**	1.01	0.93	58MV(B,C)100–20
CNRH*3017A**	1.00	0.94	58MV(B,C)120–20
CNRH*3617A**	1.00	0.94	58MV(B,C)120–20
CSRH*3012A**	1.00	0.94	58MV(B,C)120–20

DETAILED COOLING CAPACITIES - CONTINUED

25HBS330(A,G)30 Outdoor Section With FA4CNF030 Indoor Section

COOLING INDOOR MODEL	CAPACITY	POWER	FURNACE MODEL
CSRH*3612A**	1.01	0.93	58MV(B,C)120–20
CAR**3017A**	1.01	0.95	58PH*070–16
CAR**3617A**	1.01	0.96	58PH*070–16
CNRH*3017A**	1.01	0.96	58PH*070–16
CNRH*3617A**	1.01	0.96	58PH*070–16
CNRV*3017A**	1.01	0.96	58PH*070–16
CNRV*3617A**	1.01	0.96	58PH*070–16
CSRH*3012A**	1.01	0.96	58PH*070–16
CSRH*3612A**	1.04	0.96	58PH*070–16
CAR**3621A**	1.02	0.94	58PH*090–16
CNRH*3017A**	1.01	0.95	58PH*090–16
CNRH*3617A**	1.01	0.95	58PH*090–16
CNRV*3621A**	1.01	0.95	58PH*090–16
CSRH*3012A**	1.01	0.95	58PH*090–16
CSRH*3612A**	1.04	0.93	58PH*090–16

See notes on pg. 41

DETAILED COOLING CAPACITIES - CONTINUED

EVAPORATOR AIR		CONDENSER ENTERING AIR TEMPERATURES °F (°C)																	
		75 (23.9)			85 (29.4)			95 (35)			105 (40.6)			115 (46.1)			125 (51.7)		
CFM	EWB °F (°C)	Capacity MBtuh		Total System KW**	Capacity MBtuh		Total System KW**	Capacity MBtuh		Total System KW**	Capacity MBtuh		Total System KW**	Capacity MBtuh		Total System KW**	Capacity MBtuh		Total System KW**
		Total	Sens‡		Total	Sens‡		Total	Sens‡		Total	Sens‡		Total	Sens‡		Total	Sens‡	
25HBS331(A,G)30 Outdoor Section With FC4DN(F,B)030 Indoor Section																			
875	72 (22.2)	34.30	17.69	2.05	33.02	17.20	2.31	31.74	16.71	2.60	30.40	16.20	2.93	29.00	15.68	3.28	27.51	15.13	3.66
	67 (19.4)	31.31	21.90	2.06	30.12	21.39	2.32	28.92	20.88	2.61	27.66	20.35	2.93	26.33	19.80	3.27	24.93	19.22	3.65
	63 (17.2)††	29.13	21.18	2.06	28.00	20.67	2.32	26.85	20.15	2.61	25.65	19.60	2.93	24.38	19.03	3.27	23.05	18.44	3.64
	62 (16.7)	28.65	26.04	2.06	27.56	25.50	2.32	26.46	24.93	2.61	25.31	24.31	2.92	24.13	23.64	3.27	22.94	22.94	3.64
	57 (13.9)	27.77	27.77	2.06	26.88	26.88	2.32	25.97	25.97	2.61	25.01	25.01	2.92	24.00	24.00	3.27	22.94	22.94	3.64
1000	72 (22.2)	34.91	18.50	2.08	33.58	18.00	2.34	32.26	17.51	2.63	30.88	17.00	2.95	29.42	16.47	3.31	27.89	15.91	3.69
	67 (19.4)	31.88	23.23	2.08	30.64	22.72	2.34	29.40	22.20	2.64	28.10	21.66	2.95	26.73	21.10	3.30	25.30	20.51	3.68
	63 (17.2)††	29.68	22.43	2.09	28.51	21.91	2.35	27.32	21.38	2.64	26.08	20.83	2.95	24.78	20.25	3.30	23.41	19.64	3.67
	62 (16.7)	29.28	27.77	2.09	28.17	27.17	2.35	27.07	26.52	2.64	25.94	25.94	2.95	24.86	24.86	3.30	23.74	23.74	3.67
	57 (13.9)	28.82	28.82	2.09	27.89	27.89	2.35	26.93	26.93	2.64	25.93	25.93	2.95	24.87	24.87	3.30	23.75	23.75	3.67
1125	72 (22.2)	35.38	19.28	2.11	34.01	18.78	2.37	32.65	18.28	2.66	31.24	17.77	2.98	29.74	17.23	3.33	28.17	16.67	3.71
	67 (19.4)	32.33	24.52	2.11	31.05	24.00	2.37	29.78	23.47	2.66	28.44	22.92	2.98	27.05	22.34	3.33	25.59	21.73	3.71
	63 (17.2)††	30.11	23.64	2.12	28.91	23.11	2.38	27.69	22.57	2.67	26.42	22.00	2.98	25.09	21.41	3.33	23.70	20.78	3.70
	62 (16.7)	29.85	29.27	2.12	28.75	28.75	2.37	27.73	27.73	2.66	26.68	26.68	2.98	25.57	25.57	3.33	24.41	24.41	3.70
	57 (13.9)	29.71	29.71	2.12	28.73	28.73	2.37	27.73	27.73	2.66	26.68	26.68	2.98	25.58	25.58	3.33	24.41	24.41	3.70

COOLING INDOOR MODEL	CAPACITY	POWER	FURNACE MODEL
*FC4DNF030	1.00	1.00	
FC4DN(F,B)036	1.01	1.01	
FK4DN(B,F)003	1.00	0.94	
FK4DN(B,F)005	1.02	0.96	
FK4DNF001	0.98	0.96	
FK4DNF002	0.99	0.96	
CAR**3014A**	0.98	0.96	58CV(A,X)070–12
CAR**3614A**	0.99	0.97	58CV(A,X)070–12
CNRH*3017A**	0.99	0.97	58CV(A,X)070–12
CNRH*3617A**	0.99	0.97	58CV(A,X)070–12
CSRH*3012A**	0.99	0.97	58CV(A,X)070–12
CSRH*3612A**	1.01	0.95	58CV(A,X)070–12
CAR**3017A**	0.99	0.95	58CV(A,X)090–16
CAR**3617A**	0.99	0.95	58CV(A,X)090–16
CNRH*3017A**	0.99	0.95	58CV(A,X)090–16
CNRH*3617A**	0.99	0.95	58CV(A,X)090–16
CNRV*3017A**	0.99	0.95	58CV(A,X)090–16
CNRV*3617A**	0.99	0.95	58CV(A,X)090–16
CSRH*3012A**	0.99	0.96	58CV(A,X)090–16
CSRH*3612A**	1.01	0.95	58CV(A,X)090–16
CAR**3621A**	0.99	0.96	58CV(A,X)110–20
CNRH*3017A**	0.99	0.97	58CV(A,X)110–20
CNRH*3617A**	0.99	0.97	58CV(A,X)110–20
CNRV*3621A**	0.99	0.97	58CV(A,X)110–20
CSRH*3012A**	0.99	0.98	58CV(A,X)110–20
CSRH*3612A**	1.01	0.95	58CV(A,X)110–20
CNRH*3017A**	0.99	0.95	58CV(A,X)135–22
CNRH*3617A**	0.99	0.95	58CV(A,X)135–22
CSRH*3012A**	0.99	0.96	58CV(A,X)135–22
CSRH*3612A**	1.01	0.95	58CV(A,X)135–22
CNRH*3017A**	0.99	0.95	58CV(A,X)155–22
CNRH*3617A**	0.99	0.95	58CV(A,X)155–22
CSRH*3012A**	0.99	0.96	58CV(A,X)155–22
CSRH*3612A**	1.01	0.95	58CV(A,X)155–22
CAR**3017A**	1.00	0.96	58MEB040–12
CAR**3617A**	1.00	0.96	58MEB040–12
CNRH*3017A**	1.00	0.96	58MEB040–12
CNRH*3617A**	1.00	0.96	58MEB040–12
CNRV*3017A**	1.00	0.96	58MEB040–12

COOLING INDOOR MODEL	CAPACITY	POWER	FURNACE MODEL
CNRV*3617A**	1.00	0.96	58MEB040–12
CSRH*3012A**	1.00	0.96	58MEB040–12
CSRH*3612A**	1.01	0.95	58MEB040–12
CAR**3017A**	1.00	0.96	58MEB060–12
CAR**3617A**	1.01	0.96	58MEB060–12
CNRH*3017A**	1.00	0.96	58MEB060–12
CNRH*3617A**	1.00	0.96	58MEB060–12
CNRV*3017A**	1.00	0.96	58MEB060–12
CNRV*3617A**	1.00	0.96	58MEB060–12
CSRH*3012A**	1.00	0.96	58MEB060–12
CSRH*3612A**	1.01	0.95	58MEB060–12
CAR**3017A**	0.99	0.96	58MEB080–12
CAR**3617A**	1.00	0.96	58MEB080–12
CNRH*3017A**	0.99	0.95	58MEB080–12
CNRH*3617A**	0.99	0.95	58MEB080–12
CNRV*3017A**	0.99	0.96	58MEB080–12
CNRV*3617A**	0.99	0.96	58MEB080–12
CSRH*3012A**	1.00	0.96	58MEB080–12
CSRH*3612A**	1.01	0.95	58MEB080–12
CAR**3017A**	1.00	0.97	58MEB080–16
CAR**3617A**	1.01	0.97	58MEB080–16
CNRH*3017A**	1.00	0.97	58MEB080–16
CNRH*3617A**	1.00	0.97	58MEB080–16
CNRV*3017A**	1.00	0.97	58MEB080–16
CNRV*3617A**	1.00	0.97	58MEB080–16
CSRH*3012A**	1.01	0.98	58MEB080–16
CSRH*3612A**	1.01	0.95	58MEB080–16
CNRH*3017A**	0.98	0.96	58MV(B,C)040–14
CNRH*3617A**	0.98	0.96	58MV(B,C)040–14
CSRH*3012A**	0.99	0.97	58MV(B,C)040–14
CSRH*3612A**	1.01	0.95	58MV(B,C)040–14
CAR**3017A**	0.98	0.96	58MV(B,C)060–14
CAR**3617A**	0.99	0.97	58MV(B,C)060–14
CNRH*3017A**	0.98	0.96	58MV(B,C)060–14
CNRH*3617A**	0.98	0.96	58MV(B,C)060–14
CNRV*3017A**	0.98	0.96	58MV(B,C)060–14
CNRV*3617A**	0.98	0.96	58MV(B,C)060–14
CSRH*3012A**	0.99	0.97	58MV(B,C)060–14
CSRH*3612A**	1.01	0.95	58MV(B,C)060–14

COOLING INDOOR MODEL	CAPACITY	POWER	FURNACE MODEL
CAR**3621A**	0.99	0.95	58MV(B,C)080–14
CNRH*3017A**	0.99	0.97	58MV(B,C)080–14
CNRH*3617A**	0.99	0.97	58MV(B,C)080–14
CNRV*3621A**	0.99	0.97	58MV(B,C)080–14
CSRH*3012A**	0.99	0.98	58MV(B,C)080–14
CSRH*3612A**	1.01	0.95	58MV(B,C)080–14
CAR**3621A**	0.99	0.95	58MV(B,C)080–20
CNRH*3017A**	0.99	0.97	58MV(B,C)080–20
CNRH*3617A**	0.99	0.97	58MV(B,C)080–20
CNRV*3621A**	0.99	0.97	58MV(B,C)080–20
CSRH*3012A**	0.99	0.98	58MV(B,C)080–20
CSRH*3612A**	1.01	0.95	58MV(B,C)080–20
CAR**3621A**	0.99	0.96	58MV(B,C)100–20
CNRH*3017A**	0.99	0.97	58MV(B,C)100–20
CNRH*3617A**	0.99	0.97	58MV(B,C)100–20
CNRV*3621A**	0.99	0.97	58MV(B,C)100–20
CSRH*3012A**	0.99	0.98	58MV(B,C)100–20
CSRH*3612A**	1.01	0.95	58MV(B,C)100–20
CNRH*3017A**	0.99	0.97	58MV(B,C)120–20
CNRH*3617A**	0.99	0.97	58MV(B,C)120–20
CSRH*3012A**	0.99	0.97	58MV(B,C)120–20
CSRH*3612A**	1.01	0.95	58MV(B,C)120–20
CAR**3017A**	0.99	0.97	58PH*070–16
CAR**3617A**	0.99	0.98	58PH*070–16
CSRH*3612A**	1.02	1.00	58PH*070–16
CAR**3621A**	1.01	0.99	58PH*090–16
CNRH*3017A**	0.99	0.98	58PH*090–16
CNRH*3617A**	0.99	0.98	58PH*090–16
CNRV*3621A**	0.99	0.98	58PH*090–16
CSRH*3612A**	1.02	0.97	58PH*090–16

See notes on pg. 41

DETAILED COOLING CAPACITIES - CONTINUED

EVAPORATOR AIR		CONDENSER ENTERING AIR TEMPERATURES °F (°C)																	
		75 (23.9)			85 (29.4)			95 (35)			105 (40.6)			115 (46.1)			125 (51.7)		
CFM	EWB °F (°C)	Capacity MBtuh		Total System KW**	Capacity MBtuh		Total System KW**	Capacity MBtuh		Total System KW**	Capacity MBtuh		Total System KW**	Capacity MBtuh		Total System KW**	Capacity MBtuh		Total System KW**
		Total	Sens‡		Total	Sens‡		Total	Sens‡		Total	Sens‡		Total	Sens‡		Total	Sens‡	
25HBS336(A,G)30 Outdoor Section With FC4DN(F,B)036 Indoor Section																			
1050	72 (22.2)	40.55	21.08	2.54	39.07	20.52	2.82	37.54	19.94	3.13	35.95	19.34	3.47	34.28	18.72	3.84	32.54	18.08	4.24
	67 (19.4)	36.84	26.14	2.52	35.46	25.56	2.80	34.04	24.96	3.11	32.55	24.34	3.44	31.00	23.70	3.81	29.38	23.03	4.21
	63 (17.2)††	34.17	25.22	2.51	32.87	24.64	2.78	31.52	24.03	3.09	30.12	23.40	3.43	28.65	22.74	3.79	27.12	22.06	4.19
	62 (16.7)	33.63	31.11	2.51	32.39	30.47	2.78	31.11	29.79	3.09	29.79	29.05	3.42	28.43	28.43	3.79	27.18	27.18	4.19
	57 (13.9)	32.80	32.80	2.50	31.78	31.78	2.78	30.71	30.71	3.09	29.59	29.59	3.42	28.42	28.42	3.79	27.19	27.19	4.19
1200	72 (22.2)	41.29	22.08	2.58	39.75	21.51	2.86	38.16	20.93	3.17	36.51	20.32	3.51	34.79	19.69	3.88	32.99	19.05	4.28
	67 (19.4)	37.51	27.77	2.56	36.08	27.18	2.84	34.60	26.57	3.15	33.07	25.93	3.48	31.47	25.28	3.85	29.81	24.59	4.25
	63 (17.2)††	34.80	26.74	2.55	33.46	26.15	2.82	32.07	25.53	3.13	30.62	24.88	3.47	29.11	24.21	3.83	27.54	23.51	4.23
	62 (16.7)	34.40	33.15	2.55	33.15	32.42	2.82	31.86	31.86	3.13	30.66	30.66	3.47	29.42	29.42	3.83	28.13	28.13	4.23
	57 (13.9)	34.04	34.04	2.54	32.96	32.96	2.82	31.84	31.84	3.13	30.66	30.66	3.47	29.43	29.43	3.83	28.13	28.13	4.23
1350	72 (22.2)	41.86	23.05	2.62	40.28	22.46	2.90	38.65	21.88	3.21	36.95	21.27	3.55	35.18	20.64	3.92	33.33	19.98	4.32
	67 (19.4)	38.04	29.35	2.60	36.57	28.75	2.88	35.05	28.12	3.18	33.48	27.47	3.52	31.85	26.79	3.89	30.15	26.08	4.29
	63 (17.2)††	35.31	28.22	2.59	33.93	27.61	2.86	32.50	26.97	3.17	31.02	26.31	3.50	29.48	25.62	3.87	27.87	24.88	4.27
	62 (16.7)	35.11	35.11	2.59	33.95	33.95	2.86	32.78	32.78	3.17	31.55	31.55	3.51	30.26	30.26	3.88	28.91	28.91	4.28
	57 (13.9)	35.09	35.09	2.59	33.96	33.96	2.86	32.79	32.79	3.17	31.56	31.56	3.51	30.27	30.27	3.88	28.91	28.91	4.28

COOLING INDOOR MODEL	CAPACITY	POWER	FURNACE MODEL
*FC4DN(F,B)036	1.00	1.00	
FC4DN(F,B)042	1.02	1.02	
FK4DN(B,F)003	0.99	0.98	
FK4DNF002	0.98	1.00	
CNRH*4221A**	0.99	0.99	58CV(A,X)070–12
CSRH*3612A**	1.01	1.01	58CV(A,X)070–12
CSRH*4212A**	1.01	1.01	58CV(A,X)070–12
CAR**3617A**	0.98	0.98	58CV(A,X)090–16
CNRH*3617A**	0.98	1.00	58CV(A,X)090–16
CNRH*4221A**	1.00	0.98	58CV(A,X)090–16
CNRV*3617A**	0.98	1.00	58CV(A,X)090–16
CSRH*3612A**	1.01	0.99	58CV(A,X)090–16
CSRH*4212A**	1.02	1.00	58CV(A,X)090–16
CAR**3621A**	0.99	0.99	58CV(A,X)110–20
CAR**4221A**	0.99	0.99	58CV(A,X)110–20
CNRH*3617A**	0.98	1.00	58CV(A,X)110–20
CNRH*4221A**	1.00	0.98	58CV(A,X)110–20
CNRV*3621A**	0.98	1.00	58CV(A,X)110–20
CNRV*4221A**	1.00	0.98	58CV(A,X)110–20
CSRH*3612A**	1.01	0.99	58CV(A,X)110–20
CSRH*4212A**	1.02	1.00	58CV(A,X)110–20
CAR**4224A**	0.99	0.98	58CV(A,X)135–22
CNRH*3617A**	0.98	1.00	58CV(A,X)135–22
CNRH*4221A**	1.00	0.98	58CV(A,X)135–22
CSRH*3612A**	1.01	0.99	58CV(A,X)135–22
CSRH*4212A**	1.02	1.00	58CV(A,X)135–22
CAR**4224A**	1.00	0.98	58CV(A,X)155–22
CNRH*3617A**	0.98	0.98	58CV(A,X)155–22
CNRH*4221A**	1.00	0.98	58CV(A,X)155–22
CSRH*3612A**	1.01	0.99	58CV(A,X)155–22
CSRH*4212A**	1.02	1.00	58CV(A,X)155–22
CAR**3617A**	0.99	0.99	58MEB040–12
CNRH*3617A**	0.98	0.98	58MEB040–12
CNRH*4221A**	1.00	0.99	58MEB040–12
CNRV*3617A**	0.98	0.98	58MEB040–12
CSRH*3612A**	1.02	1.00	58MEB040–12
CAR**3617A**	0.99	0.99	58MEB060–12
CNRH*3617A**	0.98	0.98	58MEB060–12
CNRH*4221A**	1.00	1.00	58MEB060–12

COOLING INDOOR MODEL	CAPACITY	POWER	FURNACE MODEL
CNRV*3617A**	0.98	0.98	58MEB060–12
CSRH*3612A**	1.02	1.00	58MEB060–12
CSRH*4212A**	1.03	1.01	58MEB060–12
CAR**3617A**	0.99	0.99	58MEB080–12
CNRH*3617A**	0.98	0.98	58MEB080–12
CNRH*4221A**	1.00	1.00	58MEB080–12
CNRV*3617A**	0.98	0.98	58MEB080–12
CSRH*3612A**	1.01	0.99	58MEB080–12
CSRH*4212A**	1.02	1.00	58MEB080–12
CAR**3617A**	0.99	0.99	58MEB080–16
CNRH*3617A**	0.98	0.98	58MEB080–16
CNRH*4221A**	1.00	1.00	58MEB080–16
CNRV*3617A**	0.98	0.98	58MEB080–16
CSRH*3612A**	1.02	1.00	58MEB080–16
CSRH*4212A**	1.02	1.00	58MEB080–16
CAR**3621A**	0.99	0.98	58MEB100–20
CNRH*3617A**	0.98	0.98	58MEB100–20
CNRH*4221A**	1.00	0.98	58MEB100–20
CNRV*3621A**	0.98	0.98	58MEB100–20
CNRV*4221A**	1.00	0.98	58MEB100–20
CSRH*3612A**	1.01	0.98	58MEB100–20
CSRH*4212A**	1.02	0.99	58MEB100–20
CAR**4224A**	0.99	1.01	58MV(B,C)040–14
CNRH*4221A**	0.99	0.99	58MV(B,C)040–14
CSRH*3612A**	1.00	1.00	58MV(B,C)040–14
CSRH*4212A**	1.01	1.01	58MV(B,C)040–14
CAR**3617A**	0.98	1.00	58MV(B,C)060–14
CNRH*3617A**	0.98	0.99	58MV(B,C)060–14
CNRH*4221A**	0.99	0.98	58MV(B,C)060–14
CNRV*3617A**	0.98	0.99	58MV(B,C)060–14
CSRH*3612A**	1.01	1.01	58MV(B,C)060–14
CSRH*4212A**	1.01	0.99	58MV(B,C)060–14
CAR**4221A**	0.99	1.01	58MV(B,C)080–14
CNRH*4221A**	0.99	0.99	58MV(B,C)080–14
CNRV*4221A**	0.99	0.99	58MV(B,C)080–14
CSRH*3612A**	1.00	1.02	58MV(B,C)080–14
CSRH*4212A**	1.01	1.01	58MV(B,C)080–14
CAR**4221A**	0.99	0.99	58MV(B,C)080–20
CNRH*4221A**	0.99	0.99	58MV(B,C)080–20

COOLING INDOOR MODEL	CAPACITY	POWER	FURNACE MODEL
CNRV*3621A**	0.98	0.99	58MV(B,C)080–20
CNRV*4221A**	0.99	0.99	58MV(B,C)080–20
CSRH*3612A**	1.01	1.01	58MV(B,C)080–20
CSRH*4212A**	1.01	0.99	58MV(B,C)080–20
CAR**3621A**	0.98	0.98	58MV(B,C)100–20
CAR**4221A**	0.99	0.99	58MV(B,C)100–20
CNRH*3617A**	0.98	0.99	58MV(B,C)100–20
CNRH*4221A**	0.99	0.98	58MV(B,C)100–20
CNRV*3621A**	0.98	0.99	58MV(B,C)100–20
CNRV*4221A**	0.99	0.98	58MV(B,C)100–20
CSRH*3612A**	1.01	1.01	58MV(B,C)100–20
CSRH*4212A**	1.01	0.99	58MV(B,C)100–20
CAR**4224A**	0.99	0.99	58MV(B,C)120–20
CNRH*3617A**	0.98	0.99	58MV(B,C)120–20
CNRH*4221A**	0.99	0.98	58MV(B,C)120–20
CSRH*3612A**	1.01	1.01	58MV(B,C)120–20
CSRH*4212A**	1.01	0.99	58MV(B,C)120–20
CSRH*3612A**	1.01	1.01	58PH*070–16
CAR**3621A**	0.99	0.99	58PH*090–16
CAR**4221A**	1.01	1.01	58PH*090–16
CNRH*3617A**	0.98	0.98	58PH*090–16
CNRH*4221A**	1.00	1.00	58PH*090–16
CNRV*3621A**	0.99	0.99	58PH*090–16
CNRV*4221A**	1.00	1.00	58PH*090–16
CAR**3621A**	1.00	1.00	58PH*110–20
CAR**4221A**	1.01	1.01	58PH*110–20
CNRH*3617A**	0.99	0.99	58PH*110–20
CNRH*4221A**	1.01	1.01	58PH*110–20
CNRV*3621A**	0.99	0.99	58PH*110–20
CNRV*4221A**	1.01	1.01	58PH*110–20

See notes on pg. 41

DETAILED COOLING CAPACITIES - CONTINUED

EVAPORATOR AIR		CONDENSER ENTERING AIR TEMPERATURES °F (°C)																	
		75 (23.9)			85 (29.4)			95 (35)			105 (40.6)			115 (46.1)			125 (51.7)		
CFM	EWB °F (°C)	Capacity MBtuh		Total System KW**	Capacity MBtuh		Total System KW**	Capacity MBtuh		Total System KW**	Capacity MBtuh		Total System KW**	Capacity MBtuh		Total System KW**	Capacity MBtuh		Total System KW**
		Total	Sens‡		Total	Sens‡		Total	Sens‡		Total	Sens‡		Total	Sens‡		Total	Sens‡	
25HBS342(A,G)30 Outdoor Section With FC4DN(F,B)042 Indoor Section																			
1225	72 (22.2)	47.89	24.43	3.12	46.10	23.74	3.43	44.28	23.05	3.78	42.40	22.35	4.16	40.47	21.63	4.59	38.49	20.90	5.06
	67 (19.4)	43.67	30.25	3.09	42.01	29.54	3.40	40.32	28.83	3.74	38.58	28.11	4.12	36.80	27.36	4.55	34.98	26.62	5.02
	63 (17.2)††	40.53	29.22	3.06	38.97	28.51	3.37	37.38	27.79	3.71	35.75	27.06	4.09	34.09	26.32	4.52	32.40	25.58	4.98
	62 (16.7)	39.82	35.96	3.06	38.31	35.21	3.36	36.78	34.43	3.70	35.23	33.62	4.09	33.67	32.76	4.51	32.15	32.15	4.98
	57 (13.9)	38.58	38.58	3.05	37.35	37.35	3.35	36.10	36.10	3.70	34.82	34.82	4.08	33.50	33.50	4.51	32.15	32.15	4.98
1400	72 (22.2)	48.74	25.55	3.18	46.87	24.86	3.49	44.99	24.16	3.84	43.04	23.45	4.22	41.04	22.72	4.65	38.99	21.98	5.12
	67 (19.4)	44.49	32.11	3.14	42.76	31.39	3.45	41.00	30.67	3.80	39.19	29.93	4.18	37.34	29.17	4.60	35.46	28.41	5.07
	63 (17.2)††	41.32	30.97	3.12	39.69	30.25	3.42	38.04	29.51	3.77	36.35	28.77	4.15	34.63	28.01	4.57	32.88	27.25	5.04
	62 (16.7)	40.71	38.40	3.11	39.17	37.57	3.42	37.63	36.68	3.76	36.11	36.11	4.14	34.70	34.70	4.57	33.26	33.26	5.04
	57 (13.9)	40.08	40.08	3.11	38.79	38.79	3.42	37.47	37.47	3.76	36.11	36.11	4.14	34.71	34.71	4.57	33.27	33.27	5.04
1575	72 (22.2)	49.37	26.61	3.23	47.45	25.91	3.54	45.52	25.21	3.89	43.52	24.49	4.27	41.46	23.76	4.70	39.36	23.01	5.17
	67 (19.4)	45.09	33.88	3.20	43.31	33.15	3.51	41.50	32.41	3.85	39.64	31.65	4.23	37.75	30.88	4.66	35.82	30.09	5.13
	63 (17.2)††	41.93	32.64	3.17	40.25	31.90	3.48	38.55	31.15	3.82	36.81	30.38	4.20	35.04	29.61	4.62	33.25	28.81	5.09
	62 (16.7)	41.52	40.50	3.17	40.00	40.00	3.47	38.60	38.60	3.82	37.17	37.17	4.21	35.70	35.70	4.63	34.18	34.18	5.11
	57 (13.9)	41.35	41.35	3.17	39.99	39.99	3.47	38.60	38.60	3.82	37.17	37.17	4.21	35.70	35.70	4.63	34.19	34.19	5.10

COOLING INDOOR MODEL	CAPACITY	POWER	FURNACE MODEL
*FC4DN(F,B)042	1.00	1.00	
FC4DN(F,B)048	1.02	0.99	
FK4DN(B,F)003	0.96	0.95	
FK4DN(B,F)005	1.01	0.98	
CNRH*4221A**	0.96	0.96	58CV(A,X)070–12
CNRH*4821A**	0.98	0.98	58CV(A,X)070–12
CSRH*4212A**	0.99	0.99	58CV(A,X)070–12
CSRH*4812A**	0.99	0.99	58CV(A,X)070–12
CAR**4817A**	0.99	0.97	58CV(A,X)090–16
CNRH*4221A**	0.96	0.95	58CV(A,X)090–16
CNRH*4821A**	0.99	0.95	58CV(A,X)090–16
CSRH*4212A**	0.99	0.97	58CV(A,X)090–16
CSRH*4812A**	0.99	0.95	58CV(A,X)090–16
CAR**4221A**	0.96	0.95	58CV(A,X)110–20
CAR**4821A**	0.99	0.97	58CV(A,X)110–20
CNRH*4221A**	0.98	0.94	58CV(A,X)110–20
CNRH*4821A**	0.99	0.95	58CV(A,X)110–20
CNRV*4221A**	0.98	0.94	58CV(A,X)110–20
CNRV*4821A**	0.99	0.95	58CV(A,X)110–20
CSRH*4212A**	0.99	0.97	58CV(A,X)110–20
CSRH*4812A**	1.00	0.96	58CV(A,X)110–20
CAR**4224A**	0.96	0.95	58CV(A,X)135–22
CAR**4824A**	0.99	0.95	58CV(A,X)135–22
CNRH*4221A**	0.98	0.94	58CV(A,X)135–22
CNRH*4821A**	0.99	0.95	58CV(A,X)135–22
CNRV*4824A**	0.99	0.95	58CV(A,X)135–22
CSRH*4212A**	0.99	0.95	58CV(A,X)135–22
CSRH*4812A**	1.00	0.96	58CV(A,X)135–22
CAR**4224A**	0.96	0.93	58CV(A,X)155–22
CAR**4824A**	0.99	0.95	58CV(A,X)155–22
CNRH*4221A**	0.98	0.94	58CV(A,X)155–22
CNRH*4821A**	0.99	0.95	58CV(A,X)155–22
CNRV*4824A**	0.99	0.95	58CV(A,X)155–22
CSRH*4212A**	0.99	0.95	58CV(A,X)155–22
CSRH*4812A**	1.00	0.96	58CV(A,X)155–22
CAR**4817A**	1.00	0.98	58MEB040–12
CNRH*4221A**	0.98	0.98	58MEB040–12
CNRH*4821A**	1.00	0.98	58MEB040–12
CSRH*4212A**	1.00	0.98	58MEB040–12

COOLING INDOOR MODEL	CAPACITY	POWER	FURNACE MODEL
CSRH*4812A**	1.00	0.98	58MEB040–12
CAR**4817A**	1.00	0.98	58MEB060–12
CNRH*4221A**	0.98	0.98	58MEB060–12
CNRH*4821A**	1.00	0.98	58MEB060–12
CSRH*4212A**	1.00	0.98	58MEB060–12
CSRH*4812A**	1.00	0.98	58MEB060–12
CAR**4817A**	1.00	0.98	58MEB080–12
CNRH*4221A**	0.98	0.98	58MEB080–12
CNRH*4821A**	1.00	0.98	58MEB080–12
CSRH*4212A**	1.00	0.98	58MEB080–12
CSRH*4812A**	1.00	0.98	58MEB080–12
CAR**4817A**	1.00	0.98	58MEB080–16
CNRH*4221A**	0.96	0.96	58MEB080–16
CNRH*4821A**	0.99	0.97	58MEB080–16
CSRH*4212A**	0.99	0.97	58MEB080–16
CSRH*4812A**	1.00	0.98	58MEB080–16
CAR**4221A**	0.98	0.96	58MEB100–20
CAR**4821A**	0.99	0.95	58MEB100–20
CNRH*4221A**	0.98	0.96	58MEB100–20
CNRH*4821A**	1.00	0.97	58MEB100–20
CNRV*4221A**	0.98	0.96	58MEB100–20
CNRV*4821A**	1.00	0.96	58MEB100–20
CSRH*4212A**	1.00	0.96	58MEB100–20
CSRH*4812A**	1.00	0.96	58MEB100–20
CAR**4224A**	0.98	0.96	58MEB120–20
CAR**4824A**	1.00	0.96	58MEB120–20
CNRH*4221A**	0.98	0.96	58MEB120–20
CNRH*4821A**	1.00	0.96	58MEB120–20
CNRV*4824A**	1.00	0.96	58MEB120–20
CSRH*4212A**	1.00	0.96	58MEB120–20
CSRH*4812A**	1.00	0.96	58MEB120–20
CAR**4224A**	0.96	0.96	58MV(B,C)040–14
CAR**4824A**	0.98	0.98	58MV(B,C)040–14
CNRH*4221A**	0.96	0.96	58MV(B,C)040–14
CNRH*4821A**	0.98	0.98	58MV(B,C)040–14
CNRV*4824A**	0.98	0.98	58MV(B,C)040–14
CSRH*4212A**	0.98	0.98	58MV(B,C)040–14
CSRH*4812A**	0.99	0.99	58MV(B,C)040–14
CAR**4817A**	0.99	0.97	58MV(B,C)060–14

COOLING INDOOR MODEL	CAPACITY	POWER	FURNACE MODEL
CNRH*4221A**	0.96	0.95	58MV(B,C)060–14
CNRH*4821A**	0.99	0.97	58MV(B,C)060–14
CSRH*4212A**	0.99	0.97	58MV(B,C)060–14
CSRH*4812A**	0.99	0.97	58MV(B,C)060–14
CAR**4821A**	0.98	0.98	58MV(B,C)080–14
CNRH*4221A**	0.96	0.96	58MV(B,C)080–14
CNRH*4821A**	0.98	0.98	58MV(B,C)080–14
CNRV*4221A**	0.96	0.96	58MV(B,C)080–14
CNRV*4821A**	0.98	0.98	58MV(B,C)080–14
CSRH*4212A**	0.98	0.98	58MV(B,C)080–14
CSRH*4812A**	0.99	0.99	58MV(B,C)080–14
CAR**4221A**	0.96	0.96	58MV(B,C)080–20
CAR**4821A**	0.98	0.96	58MV(B,C)080–20
CNRH*4221A**	0.96	0.95	58MV(B,C)080–20
CNRH*4821A**	0.99	0.97	58MV(B,C)080–20
CNRV*4221A**	0.96	0.95	58MV(B,C)080–20
CNRV*4821A**	0.99	0.97	58MV(B,C)080–20
CSRH*4212A**	0.99	0.97	58MV(B,C)080–20
CSRH*4812A**	0.99	0.97	58MV(B,C)080–20
CAR**4221A**	0.96	0.96	58MV(B,C)100–20
CAR**4821A**	0.98	0.96	58MV(B,C)100–20
CNRH*4221A**	0.96	0.95	58MV(B,C)100–20
CNRH*4821A**	0.99	0.97	58MV(B,C)100–20
CNRV*4221A**	0.96	0.95	58MV(B,C)100–20
CNRV*4821A**	0.99	0.97	58MV(B,C)100–20
CSRH*4212A**	0.99	0.97	58MV(B,C)100–20
CSRH*4812A**	0.99	0.97	58MV(B,C)100–20
CAR**4224A**	0.96	0.95	58MV(B,C)120–20
CAR**4824A**	0.98	0.96	58MV(B,C)120–20
CNRH*4221A**	0.96	0.95	58MV(B,C)120–20
CNRH*4821A**	0.99	0.97	58MV(B,C)120–20
CNRV*4824A**	0.99	0.97	58MV(B,C)120–20
CSRH*4212A**	0.99	0.97	58MV(B,C)120–20
CSRH*4812A**	0.99	0.97	58MV(B,C)120–20
CAR**4221A**	0.98	0.96	58PH*090–16
CAR**4821A**	0.99	0.97	58PH*090–16
CNRH*4221A**	0.96	0.95	58PH*090–16
CNRH*4821A**	0.99	0.97	58PH*090–16
CNRV*4221A**	0.96	0.95	58PH*090–16

DETAILED COOLING CAPACITIES - CONTINUED

25HBS342(A,G)30 Outdoor Section With FC4DN(F,B)042 Indoor Section

COOLING INDOOR MODEL	CAPACITY	POWER	FURNACE MODEL
CNRV*4821A**	0.99	0.97	58PH*090–16
CSRH*4212A**	1.00	0.98	58PH*090–16
CSRH*4812A**	1.00	0.98	58PH*090–16
CAR**4221A**	0.98	0.96	58PH*110–20
CAR**4821A**	0.99	0.97	58PH*110–20
CNRH*4221A**	0.98	0.96	58PH*110–20
CNRH*4821A**	1.00	0.98	58PH*110–20
CNRV*4221A**	0.98	0.96	58PH*110–20
CNRV*4821A**	1.00	0.98	58PH*110–20
CSRH*4212A**	1.00	0.98	58PH*110–20
CSRH*4812A**	1.00	0.98	58PH*110–20
CAR**4224A**	0.98	0.96	58PH*135–20
CAR**4824A**	0.99	0.97	58PH*135–20
CNRH*4221A**	0.96	0.95	58PH*135–20
CNRH*4821A**	1.00	0.98	58PH*135–20
CNRV*4824A**	1.00	0.98	58PH*135–20
CSRH*4212A**	1.00	0.98	58PH*135–20
CSRH*4812A**	1.00	0.98	58PH*135–20

See notes on pg. 41

DETAILED COOLING CAPACITIES - CONTINUED

EVAPORATOR AIR		CONDENSER ENTERING AIR TEMPERATURES °F (°C)																	
		75 (23.9)			85 (29.4)			95 (35)			105 (40.6)			115 (46.1)			125 (51.7)		
CFM	EWB °F (°C)	Capacity MBtuh		Total System KW**	Capacity MBtuh		Total System KW**	Capacity MBtuh		Total System KW**	Capacity MBtuh		Total System KW**	Capacity MBtuh		Total System KW**	Capacity MBtuh		Total System KW**
		Total	Sens‡		Total	Sens‡		Total	Sens‡		Total	Sens‡		Total	Sens‡		Total	Sens‡	
25HBS348(A,G)30 Outdoor Section With FC4DN(F,B)048 Indoor Section																			
1400	72 (22.2)	54.36	28.62	3.39	52.40	27.85	3.77	50.36	27.05	4.20	48.22	26.22	4.67	45.96	25.35	5.18	43.60	24.46	5.74
	67 (19.4)	49.43	35.40	3.36	47.60	34.60	3.74	45.69	33.76	4.17	43.69	32.91	4.63	41.59	32.01	5.14	39.39	31.08	5.69
	63 (17.2)††	45.89	34.20	3.34	44.17	33.39	3.72	42.36	32.54	4.14	40.46	31.68	4.60	38.48	30.77	5.11	36.39	29.82	5.65
	62 (16.7)	45.06	42.14	3.34	43.38	41.29	3.72	41.63	40.39	4.14	39.82	39.43	4.60	37.96	37.68	5.10	36.18	36.18	5.65
	57 (13.9)	43.70	43.70	3.33	42.35	42.35	3.71	40.93	40.93	4.13	39.43	39.43	4.60	37.85	37.85	5.10	36.18	36.18	5.65
1600	72 (22.2)	55.40	29.99	3.45	53.36	29.21	3.83	51.24	28.40	4.26	49.03	27.56	4.73	46.70	26.69	5.25	44.25	25.78	5.81
	67 (19.4)	50.38	37.63	3.42	48.48	36.82	3.80	46.50	35.97	4.23	44.43	35.10	4.69	42.25	34.19	5.21	39.99	33.24	5.76
	63 (17.2)††	46.79	36.30	3.40	45.00	35.47	3.78	43.12	34.61	4.20	41.16	33.73	4.67	39.11	32.80	5.17	36.97	31.82	5.72
	62 (16.7)	46.08	45.08	3.40	44.37	44.15	3.78	42.62	42.33	4.20	40.92	40.92	4.67	39.26	39.26	5.17	37.50	37.50	5.73
	57 (13.9)	45.44	45.44	3.39	44.01	44.01	3.78	42.51	42.51	4.20	40.93	40.93	4.67	39.26	39.26	5.17	37.50	37.50	5.73
1800	72 (22.2)	56.19	31.29	3.51	54.09	30.50	3.89	51.91	29.68	4.32	49.63	28.84	4.79	47.23	27.95	5.31	44.73	27.04	5.87
	67 (19.4)	51.10	39.77	3.48	49.14	38.94	3.86	47.11	38.09	4.29	44.98	37.20	4.75	42.76	36.26	5.27	40.44	35.29	5.82
	63 (17.2)††	47.47	38.29	3.46	45.63	37.45	3.84	43.70	36.58	4.26	41.69	35.67	4.73	39.59	34.72	5.23	37.40	33.73	5.78
	62 (16.7)	47.01	46.74	3.46	45.40	45.40	3.84	43.83	43.83	4.27	42.17	42.17	4.73	40.43	40.43	5.24	38.59	38.59	5.80
	57 (13.9)	46.91	46.91	3.46	45.41	45.41	3.84	43.83	43.83	4.27	42.18	42.18	4.73	40.44	40.44	5.24	38.60	38.60	5.80

COOLING INDOOR MODEL	CAPACITY	POWER	FURNACE MODEL
*FC4DN(F,B)048	1.00	1.00	
FC4DN(F,B)060	1.03	1.01	
FK4DN(B,F)005	1.00	0.98	
FK4DNB006	1.02	0.94	
CSRH*6012A**	1.01	1.03	
CAR**4817A**	0.98	1.00	58CV(A,X)090–16
CNRH*4821A**	0.97	0.99	58CV(A,X)090–16
CNRH*6024A**	0.99	0.99	58CV(A,X)090–16
CSRH*4812A**	0.98	1.00	58CV(A,X)090–16
CSRH*6012A**	1.00	0.98	58CV(A,X)090–16
CAR**4821A**	0.97	0.99	58CV(A,X)110–20
CAR**6021A**	1.00	0.98	58CV(A,X)110–20
CNRH*4821A**	0.98	0.98	58CV(A,X)110–20
CNRH*6024A**	0.99	0.97	58CV(A,X)110–20
CNRV*4821A**	0.98	0.98	58CV(A,X)110–20
CSRH*4812A**	0.98	0.98	58CV(A,X)110–20
CSRH*6012A**	1.00	0.98	58CV(A,X)110–20
CAR**4824A**	0.97	0.97	58CV(A,X)135–22
CAR**6024A**	1.00	0.98	58CV(A,X)135–22
CNRH*4821A**	0.98	0.98	58CV(A,X)135–22
CNRH*6024A**	1.00	0.98	58CV(A,X)135–22
CNRV*4824A**	0.98	0.98	58CV(A,X)135–22
CNRV*6024A**	1.00	0.98	58CV(A,X)135–22
CSRH*4812A**	0.99	0.99	58CV(A,X)135–22
CSRH*6012A**	1.00	0.98	58CV(A,X)135–22
CAR**4824A**	0.98	0.96	58CV(A,X)155–22
CAR**6024A**	1.00	0.98	58CV(A,X)155–22
CNRH*4821A**	0.98	0.96	58CV(A,X)155–22
CNRH*6024A**	1.00	0.98	58CV(A,X)155–22
CNRV*4824A**	0.98	0.96	58CV(A,X)155–22
CNRV*6024A**	1.00	0.98	58CV(A,X)155–22
CSRH*4812A**	0.99	0.97	58CV(A,X)155–22
CSRH*6012A**	1.01	0.97	58CV(A,X)155–22
CAR**4817A**	0.98	0.98	58MEB080–16
CNRH*4821A**	0.98	0.98	58MEB080–16
CNRH*6024A**	1.00	1.00	58MEB080–16
CSRH*4812A**	0.99	0.99	58MEB080–16
CSRH*6012A**	1.01	1.00	58MEB080–16
CAR**4821A**	0.98	0.98	58MEB100–20

COOLING INDOOR MODEL	CAPACITY	POWER	FURNACE MODEL
CAR**6021A**	1.00	0.96	58MEB100–20
CNRH*4821A**	0.98	0.97	58MEB100–20
CNRH*6024A**	1.00	0.96	58MEB100–20
CNRV*4821A**	0.98	0.97	58MEB100–20
CSRH*4812A**	0.99	0.98	58MEB100–20
CSRH*6012A**	1.01	0.97	58MEB100–20
CAR**4824A**	0.98	0.97	58MEB120–20
CAR**6024A**	1.00	0.96	58MEB120–20
CNRH*4821A**	0.98	0.96	58MEB120–20
CNRH*6024A**	1.00	0.96	58MEB120–20
CNRV*4824A**	0.98	0.96	58MEB120–20
CNRV*6024A**	1.00	0.96	58MEB120–20
CSRH*4812A**	0.99	0.97	58MEB120–20
CSRH*6012A**	1.01	0.96	58MEB120–20
CAR**6021A**	0.99	0.99	58MV(B,C)080–20
CNRH*6024A**	0.99	0.99	58MV(B,C)080–20
CSRH*4812A**	0.98	1.00	58MV(B,C)080–20
CSRH*6012A**	1.00	0.98	58MV(B,C)080–20
CAR**4821A**	0.97	0.99	58MV(B,C)100–20
CAR**6021A**	0.99	0.99	58MV(B,C)100–20
CNRH*4821A**	0.97	0.99	58MV(B,C)100–20
CNRH*6024A**	0.99	0.99	58MV(B,C)100–20
CNRV*4821A**	0.97	0.99	58MV(B,C)100–20
CSRH*4812A**	0.98	1.00	58MV(B,C)100–20
CSRH*6012A**	1.00	1.00	58MV(B,C)100–20
CAR**4824A**	0.97	0.99	58MV(B,C)120–20
CAR**6024A**	0.99	0.99	58MV(B,C)120–20
CNRH*4821A**	0.97	0.99	58MV(B,C)120–20
CNRH*6024A**	0.99	0.99	58MV(B,C)120–20
CNRV*4824A**	0.97	0.99	58MV(B,C)120–20
CNRV*6024A**	0.99	0.99	58MV(B,C)120–20
CSRH*4812A**	0.98	1.00	58MV(B,C)120–20
CSRH*6012A**	1.00	0.98	58MV(B,C)120–20
CAR**4821A**	0.98	0.98	58PH*090–16
CNRH*4821A**	0.98	0.98	58PH*090–16
CNRH*6024A**	1.00	1.00	58PH*090–16
CNRV*4821A**	0.98	0.98	58PH*090–16
CSRH*4812A**	0.99	0.99	58PH*090–16
CSRH*6012A**	1.01	0.97	58PH*090–16

COOLING INDOOR MODEL	CAPACITY	POWER	FURNACE MODEL
CAR**4821A**	0.98	0.98	58PH*110–20
CNRH*4821A**	0.98	0.98	58PH*110–20
CNRH*6024A**	1.00	0.96	58PH*110–20
CNRV*4821A**	0.98	0.98	58PH*110–20
CSRH*4812A**	0.98	0.98	58PH*110–20
CSRH*6012A**	1.01	0.97	58PH*110–20
CAR**4824A**	0.98	0.98	58PH*135–20
CAR**4824A**	0.98	0.98	58PH*135–20
CNRH*4821A**	0.98	0.98	58PH*135–20
CNRH*6024A**	1.00	0.96	58PH*135–20
CNRV*4824A**	0.98	0.98	58PH*135–20
CNRV*6024A**	1.00	0.96	58PH*135–20
CSRH*4812A**	0.98	0.98	58PH*135–20
CSRH*6012A**	1.01	0.97	58PH*135–20

See notes on pg. 41

DETAILED COOLING CAPACITIES - CONTINUED

EVAPORATOR AIR		CONDENSER ENTERING AIR TEMPERATURES °F (°C)																	
		75 (23.9)			85 (29.4)			95 (35)			105 (40.6)			115 (46.1)			125 (51.7)		
CFM	EWB °F (°C)	Capacity MBtuh		Total System KW**	Capacity MBtuh		Total System KW**	Capacity MBtuh		Total System KW**	Capacity MBtuh		Total System KW**	Capacity MBtuh		Total System KW**	Capacity MBtuh		Total System KW**
		Total	Sens‡		Total	Sens‡		Total	Sens‡		Total	Sens‡		Total	Sens‡		Total	Sens‡	
25HBS360(A,G)31 Outdoor Section With FC4DNF060 Indoor Section																			
1750	72 (22.2)	65.33	34.20	4.14	62.96	33.29	4.57	60.55	32.37	5.06	58.02	31.41	5.60	55.36	30.42	6.19	52.57	29.39	6.83
	67 (19.4)	59.64	42.73	4.09	57.44	41.78	4.52	55.16	40.82	5.00	52.81	39.83	5.54	50.33	38.80	6.12	47.74	37.73	6.76
	63 (17.2)††	55.45	41.28	4.05	53.38	40.33	4.48	51.23	39.36	4.96	49.00	38.36	5.49	46.67	37.31	6.07	44.22	36.22	6.70
	62 (16.7)	54.50	51.11	4.04	52.50	50.09	4.47	50.45	49.02	4.95	48.34	47.86	5.49	46.25	46.25	6.07	44.26	44.26	6.70
	57 (13.9)	53.24	53.24	4.03	51.61	51.61	4.46	49.91	49.91	4.95	48.13	48.13	5.48	46.25	46.25	6.07	44.27	44.27	6.70
2000	72 (22.2)	66.39	35.82	4.23	63.94	34.90	4.66	61.44	33.97	5.15	58.82	33.01	5.69	56.08	32.01	6.28	53.21	30.96	6.92
	67 (19.4)	60.63	45.43	4.17	58.36	44.47	4.61	56.00	43.50	5.09	53.57	42.49	5.63	51.02	41.44	6.21	48.35	40.34	6.85
	63 (17.2)††	56.44	43.83	4.13	54.29	42.86	4.57	52.06	41.87	5.05	49.76	40.84	5.58	47.35	39.78	6.16	44.84	38.66	6.79
	62 (16.7)	55.69	54.60	4.13	53.68	53.28	4.56	51.72	51.72	5.05	49.84	49.84	5.58	47.86	47.86	6.17	45.78	45.78	6.81
	57 (13.9)	55.26	55.26	4.12	53.53	53.53	4.56	51.73	51.73	5.05	49.85	49.85	5.58	47.87	47.87	6.17	45.78	45.78	6.81
2250	72 (22.2)	67.17	37.37	4.31	64.65	36.44	4.75	62.08	35.50	5.23	59.40	34.53	5.77	56.60	33.52	6.36	53.65	32.47	7.00
	67 (19.4)	61.37	48.01	4.26	59.03	47.04	4.69	56.62	46.05	5.18	54.13	45.02	5.71	51.53	43.95	6.30	48.80	42.82	6.93
	63 (17.2)††	57.17	46.25	4.22	54.96	45.27	4.65	52.68	44.25	5.13	50.32	43.20	5.66	47.86	42.11	6.25	45.30	40.95	6.88
	62 (16.7)	56.94	56.94	4.22	55.12	55.12	4.65	53.23	53.23	5.14	51.26	51.26	5.68	49.18	49.18	6.27	46.99	46.99	6.91
	57 (13.9)	56.94	56.94	4.22	55.12	55.12	4.65	53.24	53.24	5.14	51.26	51.26	5.68	49.19	49.19	6.27	47.00	47.00	6.91

COOLING INDOOR MODEL	CAPACITY	POWER	FURNACE MODEL
*FC4DN(F,B)060	1.00	1.00	
FK4DNB006	0.99	0.99	
CNRH*6024A**	0.97	0.99	58CV(A,X)135–22
CNRV*6024A**	0.97	0.99	58CV(A,X)135–22
CSRH*6012A**	0.97	0.97	58CV(A,X)135–22
CAR**6024A**	0.97	0.97	58CV(A,X)155–22
CNRH*6024A**	0.97	0.97	58CV(A,X)155–22

COOLING INDOOR MODEL	CAPACITY	POWER	FURNACE MODEL
CNRV*6024A**	0.97	0.97	58CV(A,X)155–22
CSRH*6012A**	0.97	0.97	58CV(A,X)155–22
CAR**6021A**	0.96	0.98	58MEB100–20
CNRH*6024A**	0.96	0.99	58MEB100–20
CSRH*6012A**	0.97	0.97	58MEB100–20
CAR**6024A**	0.97	0.97	58MEB120–20
CNRH*6024A**	0.96	0.96	58MEB120–20

COOLING INDOOR MODEL	CAPACITY	POWER	FURNACE MODEL
CNRV*6024A**	0.96	0.96	58MEB120–20
CSRH*6012A**	0.97	0.97	58MEB120–20
CAR**6021A**	0.97	0.97	58PH*110–20
CNRH*6024A**	0.97	0.99	58PH*110–20
CSRH*6012A**	0.97	0.97	58PH*110–20
CSRH*6012A**	0.97	0.99	58PH*135–20

* Tested combination.

† Total and sensible capacities are net capacities. Blower motor heat has been subtracted.

‡ Sensible capacities shown are based on 80°F (27°C) entering air at the indoor coil. For sensible capacities at other than 80°F (27°C), deduct 835 Btuh (245 kW) per 1000 CFM (480 L/S) of indoor coil air for each degree below 80°F (27°C), or add 835 Btuh (245 kW) per 1000 CFM (480 L/S) of indoor coil air per degree above 80°F (27°C).

** System kw is total of indoor and outdoor unit kilowatts.

†† At TVA rating indoor condition (75°F edb/63°F ewb). All other indoor air temperatures are at 80°F edb.

EWB — Entering Wet Bulb

NOTES:

1. Detailed cooling capacities are based on indoor and outdoor unit at the same elevation per ARI standard 210/240–94. If additional tubing length and/or indoor unit is located above outdoor unit, a slight variation in capacity may occur.
2. When the required data falls between the published data, interpolation may be performed. Extrapolation is not an acceptable practice.

HEAT PUMP HEATING PERFORMANCE

INDOOR AIR		OUTDOOR COIL ENTERING AIR TEMPERATURES °F (°C)																							
		–3 (–19.4)			7 (–13.9)			17 (–8.3)			27 (–2.8)			37 (2.8)			47 (8.3)			57 (13.9)			67 (19.4)		
EDB °F (°C)	CFM	Capacity MBtuh		Total Sys. KW†	Capacity MBtuh		Total Sys. KW†	Capacity MBtuh		Total Sys. KW†	Capacity MBtuh		Total Sys. KW†	Capacity MBtuh		Total Sys. KW†	Capacity MBtuh		Total Sys. KW†	Capacity MBtuh		Total Sys. KW†	Capacity MBtuh		Total Sys. KW†
		Total	Integ*		Total	Integ*		Total	Integ*		Total	Integ*		Total	Integ*		Total	Integ*		Total	Integ*		Total	Integ*	
25HBS318(A,G)30 Outdoor Section With FA4CNF018 Indoor Section																									
65 (18.3)	525	9.66	8.89	1.25	12.20	11.21	1.31	15.14	13.80	1.38	17.80	15.81	1.44	18.43	16.77	1.46	17.95	17.95	1.44	17.03	17.03	1.42	15.87	15.87	1.38
	600	9.85	9.06	1.27	12.42	11.41	1.32	15.39	14.04	1.38	17.70	15.72	1.43	17.72	16.12	1.43	17.05	17.05	1.41	16.00	16.00	1.39	14.42	14.42	1.35
	675	10.02	9.22	1.29	12.62	11.60	1.33	15.62	14.24	1.39	17.60	15.63	1.43	17.01	15.48	1.42	16.40	16.40	1.41	15.20	15.20	1.38	13.52	13.52	1.35
70 (21.1)	525	9.43	8.68	1.31	11.94	10.97	1.37	14.84	13.53	1.44	17.79	15.80	1.52	19.11	17.39	1.56	18.81	18.81	1.54	18.21	18.21	1.52	17.62	17.62	1.50
	600	9.62	8.85	1.33	12.15	11.17	1.38	15.10	13.77	1.45	17.82	15.83	1.51	18.44	16.78	1.52	18.00	18.00	1.51	17.34	17.34	1.49	16.32	16.32	1.47
	675	9.79	9.01	1.35	12.35	11.35	1.40	15.32	13.97	1.46	17.80	15.81	1.51	17.96	16.34	1.51	17.40	17.40	1.50	16.62	16.62	1.48	15.45	15.45	1.45
75 (23.9)	525	9.19	8.45	1.37	11.68	10.73	1.44	14.53	13.25	1.51	17.67	15.70	1.60	19.47	17.72	1.65	19.53	19.53	1.65	19.14	19.14	1.63	18.57	18.57	1.61
	600	9.38	8.63	1.39	11.89	10.93	1.45	14.78	13.48	1.51	17.81	15.81	1.59	19.06	17.34	1.62	18.78	18.78	1.61	18.15	18.15	1.59	17.76	17.76	1.58
	675	9.55	8.79	1.41	12.08	11.10	1.46	15.00	13.68	1.52	17.87	15.87	1.59	18.61	16.94	1.61	18.22	18.22	1.59	17.74	17.74	1.58	16.92	16.92	1.56

HEATING INDOOR MODEL	CAPACITY	POWER	FURNACE MODEL
*FA4CN(F,C)018	1.00	1.00	
FA4CN(F,C)024	0.89	0.95	
FC4DNF018	0.97	0.90	
FC4DNF024	0.86	0.84	
FF1ENE018	1.00	1.00	
FF1ENE024	0.87	0.92	
FK4DNF001	0.81	0.82	
FK4DNF002	0.81	0.80	
CAR**1814A**	1.01	1.03	
CAR**2414A**	0.87	0.92	
CAR**2417A**	0.87	0.92	
CNRF*2418A**	0.87	0.89	
CNRH*2417A**	0.87	0.89	
CNRV*1814A**	0.96	0.96	
CNRV*2414A**	0.87	0.89	
CNRV*2417A**	0.87	0.89	
CSRH*2412A**	0.82	0.89	
CAR**1814A**	1.00	0.95	58CV(A,X)070–12
CAR**2414A**	0.87	0.83	58CV(A,X)070–12
CNRH*2417A**	0.87	0.80	58CV(A,X)070–12
CNRV*1814A**	0.95	0.86	58CV(A,X)070–12
CNRV*2414A**	0.87	0.80	58CV(A,X)070–12
CSRH*2412A**	0.82	0.80	58CV(A,X)070–12
CAR**2417A**	0.87	0.83	58CV(A,X)090–16
CNRH*2417A**	0.87	0.80	58CV(A,X)090–16
CNRV*2417A**	0.87	0.80	58CV(A,X)090–16
CSRH*2412A**	0.82	0.80	58CV(A,X)090–16
CAR**2417A**	0.77	0.75	58MEB040–12
CNRH*2417A**	0.83	0.77	58MEB040–12
CNRV*2417A**	0.83	0.77	58MEB040–12
CSRH*2412A**	0.76	0.75	58MEB040–12
CAR**2417A**	0.80	0.77	58MEB060–12
CNRH*2417A**	0.87	0.80	58MEB060–12
CNRV*2417A**	0.87	0.80	58MEB060–12
CSRH*2412A**	0.81	0.78	58MEB060–12
CNRH*2417A**	0.87	0.80	58MV(B,C)040–14
CSRH*2412A**	0.82	0.80	58MV(B,C)040–14
CAR**2417A**	0.87	0.83	58MV(B,C)060–14
CNRH*2417A**	0.87	0.80	58MV(B,C)060–14
CNRV*2417A**	0.87	0.80	58MV(B,C)060–14
CSRH*2412A**	0.82	0.80	58MV(B,C)060–14
CNRH*2417A**	0.87	0.80	58MV(B,C)080–14
CSRH*2412A**	0.82	0.80	58MV(B,C)080–14

HEATING INDOOR MODEL	CAPACITY	POWER	FURNACE MODEL
CAR**1814A**	1.00	0.95	58PH*045–08
CNRV*1814A**	0.99	0.91	58PH*045–08

See notes on pg. 49

HEAT PUMP HEATING PERFORMANCE CONTINUED

INDOOR AIR		OUTDOOR COIL ENTERING AIR TEMPERATURES °F (°C)																							
		–3 (–19.4)			7 (–13.9)			17 (–8.3)			27 (–2.8)			37 (2.8)			47 (8.3)			57 (13.9)			67 (19.4)		
EDB °F (°C)	CFM	Capacity MBtuh		Total Sys. KW†	Capacity MBtuh		Total Sys. KW†	Capacity MBtuh		Total Sys. KW†	Capacity MBtuh		Total Sys. KW†	Capacity MBtuh		Total Sys. KW†	Capacity MBtuh		Total Sys. KW†	Capacity MBtuh		Total Sys. KW†	Capacity MBtuh		Total Sys. KW†
		Total	Integ*		Total	Integ*		Total	Integ*		Total	Integ*		Total	Integ*		Total	Integ*		Total	Integ*		Total	Integ*	
25HBS324(A,G)30 Outdoor Section With FA4CNC024 Indoor Section																									
65 (18.3)	700	9.96	9.16	1.51	12.42	11.42	1.58	15.20	13.86	1.66	18.29	16.24	1.75	21.61	19.66	1.85	24.08	24.08	1.94	26.42	26.42	2.02	26.97	26.97	2.04
	800	10.14	9.33	1.53	12.62	11.60	1.59	15.43	14.07	1.66	18.54	16.47	1.75	21.54	19.60	1.83	23.60	23.60	1.90	24.52	24.52	1.93	23.37	23.37	1.88
	900	10.31	9.48	1.56	12.80	11.77	1.61	15.63	14.25	1.67	18.77	16.67	1.76	21.32	19.40	1.82	23.08	23.08	1.88	22.88	22.88	1.87	22.24	22.24	1.85
70 (21.1)	700	9.70	8.92	1.58	12.19	11.20	1.65	14.92	13.61	1.73	18.01	16.00	1.83	21.41	19.49	1.96	24.16	24.16	2.04	26.65	26.65	2.13	28.10	28.10	2.19
	800	9.88	9.09	1.60	12.38	11.38	1.67	15.15	13.82	1.74	18.26	16.22	1.83	21.54	19.60	1.92	23.80	23.80	2.00	25.64	25.64	2.06	25.56	25.56	2.05
	900	10.05	9.25	1.62	12.56	11.54	1.68	15.36	14.00	1.75	18.48	16.42	1.84	21.47	19.53	1.92	23.41	23.41	1.98	24.03	24.03	2.00	23.70	23.70	1.98
75 (23.9)	700	9.40	8.65	1.64	11.93	10.96	1.73	14.65	13.35	1.81	17.71	15.73	1.92	21.10	19.20	2.04	24.24	24.24	2.15	26.78	26.78	2.25	29.06	29.06	2.34
	800	9.59	8.82	1.66	12.13	11.15	1.74	14.88	13.56	1.82	17.96	15.95	1.91	21.36	19.43	2.02	23.92	23.92	2.10	26.17	26.17	2.19	26.68	26.68	2.20
	900	9.76	8.98	1.69	12.31	11.31	1.76	15.08	13.75	1.83	18.18	16.15	1.92	21.48	19.54	2.01	23.62	23.62	2.08	25.00	25.00	2.13	24.91	24.91	2.12

HEATING INDOOR MODEL	CAPACITY	POWER	FURNACE MODEL
*FA4CN(F,C)024	1.00	1.00	
FA4CN(F,C)030	0.95	0.97	
FC4DNF024	0.98	0.93	
FC4DNF030	0.92	0.89	
FF1ENE030	0.99	0.99	
FK4DN(B,F)003	0.87	0.85	
FK4DNF001	0.95	0.92	
FK4DNF002	0.95	0.88	
CAR**2414A**	1.00	0.99	
CAR**2417A**	1.00	0.99	
CAR**3014A**	0.87	0.94	
CAR**3017A**	0.87	0.93	
CNRF*2418A**	1.00	0.96	
CNRH*2417A**	1.00	0.96	
CNRH*3017A**	0.87	0.93	
CNRV*2414A**	1.00	0.96	
CNRV*2417A**	1.00	0.96	
CNRV*3014A**	0.87	0.93	
CNRV*3017A**	0.86	0.92	
CSRH*2412A**	0.97	0.95	
CSRH*3012A**	0.85	0.92	
CAR**2414A**	0.99	0.94	58CV(A,X)070–12
CAR**3014A**	0.92	0.90	58CV(A,X)070–12
CNRH*2417A**	0.99	0.92	58CV(A,X)070–12
CNRH*3017A**	0.87	0.85	58CV(A,X)070–12
CNRV*2414A**	1.00	0.92	58CV(A,X)070–12
CNRV*3014A**	0.87	0.85	58CV(A,X)070–12
CSRH*2412A**	0.97	0.91	58CV(A,X)070–12
CSRH*3012A**	0.85	0.84	58CV(A,X)070–12
CAR**2417A**	0.99	0.93	58CV(A,X)090–16
CAR**3017A**	0.87	0.84	58CV(A,X)090–16
CNRH*2417A**	0.99	0.91	58CV(A,X)090–16
CNRH*3017A**	0.87	0.84	58CV(A,X)090–16
CNRV*2417A**	0.99	0.91	58CV(A,X)090–16
CNRV*3017A**	0.87	0.84	58CV(A,X)090–16
CSRH*2412A**	0.97	0.90	58CV(A,X)090–16
CSRH*3012A**	0.85	0.83	58CV(A,X)090–16
CNRH*2417A**	0.99	0.91	58CV(A,X)110–20
CNRH*3017A**	0.87	0.85	58CV(A,X)110–20
CSRH*2412A**	0.97	0.91	58CV(A,X)110–20
CSRH*3012A**	0.85	0.84	58CV(A,X)110–20
CNRH*2417A**	0.99	0.91	58CV(A,X)135–22
CNRH*3017A**	0.87	0.84	58CV(A,X)135–22
CSRH*2412A**	0.97	0.91	58CV(A,X)135–22

HEATING INDOOR MODEL	CAPACITY	POWER	FURNACE MODEL
CSRH*3012A**	0.85	0.84	58CV(A,X)135–22
CNRH*2417A**	0.99	0.91	58CV(A,X)155–22
CNRH*3017A**	0.87	0.84	58CV(A,X)155–22
CSRH*2412A**	0.97	0.91	58CV(A,X)155–22
CSRH*3012A**	0.85	0.84	58CV(A,X)155–22
CAR**2417A**	0.98	0.90	58MEB040–12
CAR**3017A**	0.84	0.83	58MEB040–12
CNRH*2417A**	1.00	0.90	58MEB040–12
CNRH*3017A**	0.85	0.84	58MEB040–12
CNRV*2417A**	1.00	0.90	58MEB040–12
CNRV*3017A**	0.83	0.82	58MEB040–12
CSRH*2412A**	0.97	0.90	58MEB040–12
CSRH*3012A**	0.83	0.83	58MEB040–12
CAR**2417A**	0.97	0.90	58MEB060–12
CAR**3017A**	0.83	0.82	58MEB060–12
CNRH*2417A**	1.00	0.90	58MEB060–12
CNRH*3017A**	0.83	0.83	58MEB060–12
CNRV*2417A**	1.00	0.90	58MEB060–12
CNRV*3017A**	0.83	0.83	58MEB060–12
CSRH*2412A**	0.96	0.89	58MEB060–12
CSRH*3012A**	0.82	0.82	58MEB060–12
CAR**2417A**	0.98	0.91	58MEB080–12
CAR**3017A**	0.85	0.84	58MEB080–12
CNRH*2417A**	1.00	0.91	58MEB080–12
CNRH*3017A**	0.83	0.82	58MEB080–12
CNRV*2417A**	1.00	0.91	58MEB080–12
CNRV*3017A**	0.85	0.84	58MEB080–12
CSRH*2412A**	0.97	0.90	58MEB080–12
CSRH*3012A**	0.84	0.84	58MEB080–12
CNRH*2417A**	0.99	0.91	58MV(B,C)040–14
CNRH*3017A**	0.87	0.85	58MV(B,C)040–14
CSRH*2412A**	0.97	0.91	58MV(B,C)040–14
CSRH*3012A**	0.85	0.84	58MV(B,C)040–14
CAR**2417A**	0.99	0.93	58MV(B,C)060–14
CAR**3017A**	0.87	0.85	58MV(B,C)060–14
CNRH*2417A**	0.99	0.91	58MV(B,C)060–14
CNRH*3017A**	0.87	0.85	58MV(B,C)060–14
CNRV*2417A**	0.99	0.91	58MV(B,C)060–14
CNRV*3017A**	0.87	0.85	58MV(B,C)060–14
CSRH*2412A**	0.97	0.91	58MV(B,C)060–14
CSRH*3012A**	0.85	0.84	58MV(B,C)060–14
CNRH*2417A**	0.99	0.91	58MV(B,C)080–14
CNRH*3017A**	0.87	0.85	58MV(B,C)080–14
CSRH*2412A**	0.97	0.91	58MV(B,C)080–14

HEATING INDOOR MODEL	CAPACITY	POWER	FURNACE MODEL
CSRH*3012A**	0.85	0.84	58MV(B,C)080–14
CNRH*2417A**	0.99	0.91	58MV(B,C)080–20
CNRH*3017A**	0.87	0.85	58MV(B,C)080–20
CSRH*2412A**	0.97	0.91	58MV(B,C)080–20
CSRH*3012A**	0.85	0.84	58MV(B,C)080–20
CNRH*2417A**	0.99	0.91	58MV(B,C)100–20
CNRH*3017A**	0.87	0.85	58MV(B,C)100–20
CSRH*2412A**	0.97	0.91	58MV(B,C)100–20
CSRH*3012A**	0.85	0.84	58MV(B,C)100–20
CNRH*2417A**	0.99	0.92	58MV(B,C)120–20
CNRH*3017A**	0.87	0.85	58MV(B,C)120–20
CSRH*2412A**	0.97	0.91	58MV(B,C)120–20
CSRH*3012A**	0.85	0.84	58MV(B,C)120–20
CAR**2414A**	0.96	0.90	58PH*045–08
CNRH*2417A**	0.97	0.90	58PH*045–08
CNRV*2414A**	0.97	0.90	58PH*045–08

See notes on pg. 49

HEAT PUMP HEATING PERFORMANCE CONTINUED

INDOOR AIR		OUTDOOR COIL ENTERING AIR TEMPERATURES °F (°C)																							
		–3 (–19.4)			7 (–13.9)			17 (–8.3)			27 (–2.8)			37 (2.8)			47 (8.3)			57 (13.9)			67 (19.4)		
EDB °F (°C)	CFM	Capacity MBtuh		Total Sys. KW†	Capacity MBtuh		Total Sys. KW†	Capacity MBtuh		Total Sys. KW†	Capacity MBtuh		Total Sys. KW†	Capacity MBtuh		Total Sys. KW†	Capacity MBtuh		Total Sys. KW†	Capacity MBtuh		Total Sys. KW†	Capacity MBtuh		Total Sys. KW†
		Total	Integ*		Total	Integ*		Total	Integ*		Total	Integ*		Total	Integ*		Total	Integ*		Total	Integ*		Total	Integ*	
25HBS330(A,G)30 Outdoor Section With FA4CNF030 Indoor Section																									
65 (18.3)	875	12.29	11.31	1.99	15.26	14.02	2.07	18.47	16.84	2.15	22.03	19.57	2.25	26.00	23.66	2.38	30.08	30.08	2.50	33.89	33.89	2.61	38.13	38.13	2.78
	1000	12.52	11.51	2.02	15.50	14.24	2.09	18.74	17.09	2.15	22.33	19.84	2.25	26.35	23.98	2.37	30.08	30.08	2.44	33.69	33.69	2.56	36.45	36.45	2.65
	1125	12.72	11.70	2.05	15.69	14.42	2.11	18.98	17.30	2.17	22.60	20.07	2.26	26.64	24.24	2.37	29.95	29.95	2.42	33.52	33.52	2.53	34.52	34.52	2.56
70 (21.1)	875	11.96	11.00	2.08	14.96	13.75	2.17	18.17	16.57	2.25	21.71	19.28	2.36	25.65	23.34	2.50	29.88	29.88	2.64	33.78	33.78	2.75	37.90	37.90	2.92
	1000	12.18	11.21	2.10	15.20	13.97	2.18	18.43	16.80	2.26	22.01	19.55	2.35	25.99	23.65	2.48	30.00	30.00	2.58	33.60	33.60	2.69	37.40	37.40	2.83
	1125	12.39	11.40	2.13	15.42	14.17	2.20	18.66	17.01	2.27	22.27	19.78	2.36	26.28	23.92	2.47	29.96	29.96	2.55	33.48	33.48	2.66	35.74	35.74	2.73
75 (23.9)	875	11.60	10.67	2.16	14.65	13.46	2.26	17.88	16.30	2.36	21.38	18.99	2.47	25.30	23.02	2.61	29.59	29.59	2.78	33.66	33.66	2.89	37.69	37.69	3.06
	1000	11.82	10.88	2.18	14.89	13.68	2.28	18.14	16.54	2.36	21.69	19.26	2.46	25.64	23.33	2.59	29.79	29.79	2.72	33.58	33.58	2.83	37.52	37.52	2.98
	1125	12.03	11.07	2.21	15.11	13.88	2.30	18.37	16.75	2.37	21.94	19.49	2.47	25.93	23.59	2.59	29.91	29.91	2.68	33.41	33.41	2.79	36.71	36.71	2.91

HEATING INDOOR MODEL	CAPACITY	POWER	FURNACE MODEL
*FA4CN(F,C)030	1.00	1.00	
FC4DN(F,B)036	0.97	0.95	
FC4DNF030	0.99	0.95	
FF1ENE030	1.00	1.00	
FF1ENE036	0.98	0.98	
FK4DN(B,F)003	0.97	0.92	
FK4DN(B,F)005	0.83	0.83	
FK4DNF001	0.99	0.97	
FK4DNF002	0.99	0.94	
CAR**3014A**	0.99	0.99	
CAR**3017A**	0.99	0.99	
CAR**3614A**	0.98	0.98	
CAR**3617A**	0.98	0.98	
CAR**3621A**	0.98	0.98	
CNRF*3618A**	0.99	0.99	
CNRH*3017A**	0.99	0.99	
CNRH*3617A**	0.98	0.98	
CNRV*3014A**	0.99	0.99	
CNRV*3017A**	0.99	0.99	
CNRV*3617A**	0.98	0.98	
CNRV*3621A**	0.98	0.98	
CSRH*3012A**	0.99	0.98	
CSRH*3612A**	0.97	0.95	
CAR**3014A**	0.97	0.96	58CV(A,X)070–12
CAR**3614A**	0.97	0.95	58CV(A,X)070–12
CNRH*3017A**	0.97	0.95	58CV(A,X)070–12
CNRH*3617A**	0.97	0.95	58CV(A,X)070–12
CNRV*3014A**	0.97	0.96	58CV(A,X)070–12
CSRH*3012A**	0.97	0.95	58CV(A,X)070–12
CSRH*3612A**	0.96	0.92	58CV(A,X)070–12
CAR**3017A**	0.97	0.95	58CV(A,X)090–16
CAR**3617A**	0.97	0.93	58CV(A,X)090–16
CNRH*3017A**	0.97	0.95	58CV(A,X)090–16
CNRH*3617A**	0.97	0.94	58CV(A,X)090–16
CNRV*3017A**	0.97	0.95	58CV(A,X)090–16
CNRV*3617A**	0.97	0.94	58CV(A,X)090–16
CSRH*3012A**	0.97	0.94	58CV(A,X)090–16
CSRH*3612A**	0.96	0.91	58CV(A,X)090–16
CAR**3621A**	0.97	0.93	58CV(A,X)110–20
CNRH*3017A**	0.97	0.94	58CV(A,X)110–20
CNRH*3617A**	0.97	0.94	58CV(A,X)110–20
CNRV*3621A**	0.97	0.94	58CV(A,X)110–20
CSRH*3012A**	0.97	0.94	58CV(A,X)110–20
CSRH*3612A**	0.95	0.90	58CV(A,X)110–20
CNRH*3017A**	0.97	0.94	58CV(A,X)135–22
CNRH*3617A**	0.97	0.94	58CV(A,X)135–22

HEATING INDOOR MODEL	CAPACITY	POWER	FURNACE MODEL
CSRH*3012A**	0.97	0.94	58CV(A,X)135–22
CSRH*3612A**	0.95	0.90	58CV(A,X)135–22
CNRH*3017A**	0.97	0.94	58CV(A,X)155–22
CNRH*3617A**	0.97	0.93	58CV(A,X)155–22
CSRH*3012A**	0.97	0.94	58CV(A,X)155–22
CSRH*3612A**	0.95	0.90	58CV(A,X)155–22
CAR**3017A**	0.97	0.93	58MEB040–12
CAR**3617A**	0.97	0.92	58MEB040–12
CNRH*3017A**	0.97	0.93	58MEB040–12
CNRH*3617A**	0.97	0.93	58MEB040–12
CNRV*3017A**	0.97	0.93	58MEB040–12
CNRV*3617A**	0.97	0.93	58MEB040–12
CSRH*3012A**	0.97	0.93	58MEB040–12
CSRH*3612A**	0.95	0.88	58MEB040–12
CAR**3017A**	0.97	0.93	58MEB060–12
CAR**3617A**	0.97	0.92	58MEB060–12
CNRH*3017A**	0.97	0.93	58MEB060–12
CNRH*3617A**	0.97	0.93	58MEB060–12
CNRV*3017A**	0.97	0.93	58MEB060–12
CNRV*3617A**	0.97	0.93	58MEB060–12
CSRH*3012A**	0.97	0.93	58MEB060–12
CSRH*3612A**	0.95	0.88	58MEB060–12
CAR**3017A**	0.97	0.93	58MEB080–12
CAR**3617A**	0.97	0.92	58MEB080–12
CNRH*3017A**	0.97	0.93	58MEB080–12
CNRH*3617A**	0.97	0.93	58MEB080–12
CNRV*3017A**	0.97	0.93	58MEB080–12
CNRV*3617A**	0.97	0.93	58MEB080–12
CSRH*3012A**	0.97	0.93	58MEB080–12
CSRH*3612A**	0.95	0.89	58MEB080–12
CAR**3017A**	0.97	0.93	58MEB080–16
CAR**3617A**	0.97	0.92	58MEB080–16
CNRH*3017A**	0.97	0.93	58MEB080–16
CNRH*3617A**	0.97	0.93	58MEB080–16
CNRV*3017A**	0.97	0.93	58MEB080–16
CNRV*3617A**	0.97	0.93	58MEB080–16
CSRH*3012A**	0.97	0.93	58MEB080–16
CSRH*3612A**	0.94	0.88	58MEB080–16
CNRH*3017A**	0.97	0.95	58MV(B,C)040–14
CNRH*3617A**	0.97	0.95	58MV(B,C)040–14
CSRH*3012A**	0.97	0.95	58MV(B,C)040–14
CSRH*3612A**	0.96	0.92	58MV(B,C)040–14
CAR**3017A**	0.97	0.95	58MV(B,C)060–14
CAR**3617A**	0.97	0.94	58MV(B,C)060–14
CNRH*3017A**	0.97	0.95	58MV(B,C)060–14
CNRH*3617A**	0.97	0.95	58MV(B,C)060–14

HEATING INDOOR MODEL	CAPACITY	POWER	FURNACE MODEL
CNRV*3017A**	0.97	0.95	58MV(B,C)060–14
CNRV*3617A**	0.97	0.95	58MV(B,C)060–14
CSRH*3012A**	0.97	0.95	58MV(B,C)060–14
CSRH*3612A**	0.96	0.92	58MV(B,C)060–14
CAR**3621A**	0.97	0.93	58MV(B,C)080–14
CNRH*3017A**	0.97	0.95	58MV(B,C)080–14
CNRH*3617A**	0.97	0.94	58MV(B,C)080–14
CNRV*3621A**	0.97	0.94	58MV(B,C)080–14
CSRH*3012A**	0.97	0.95	58MV(B,C)080–14
CSRH*3612A**	0.96	0.91	58MV(B,C)080–14
CAR**3621A**	0.97	0.94	58MV(B,C)080–20
CNRH*3017A**	0.97	0.95	58MV(B,C)080–20
CNRH*3617A**	0.97	0.94	58MV(B,C)080–20
CNRV*3621A**	0.97	0.94	58MV(B,C)080–20
CSRH*3012A**	0.97	0.95	58MV(B,C)080–20
CSRH*3612A**	0.96	0.91	58MV(B,C)080–20
CAR**3621A**	0.97	0.93	58MV(B,C)100–20
CNRH*3017A**	0.97	0.95	58MV(B,C)100–20
CNRH*3617A**	0.97	0.94	58MV(B,C)100–20
CNRV*3621A**	0.97	0.94	58MV(B,C)100–20
CSRH*3012A**	0.97	0.94	58MV(B,C)100–20
CSRH*3612A**	0.96	0.91	58MV(B,C)100–20
CNRH*3017A**	0.97	0.95	58MV(B,C)120–20
CNRH*3617A**	0.97	0.94	58MV(B,C)120–20
CSRH*3012A**	0.97	0.95	58MV(B,C)120–20
CSRH*3612A**	0.96	0.91	58MV(B,C)120–20
CAR**3017A**	0.98	0.95	58PH*070–16
CAR**3617A**	0.97	0.94	58PH*070–16
CNRH*3017A**	0.98	0.95	58PH*070–16
CNRH*3617A**	0.98	0.95	58PH*070–16
CNRV*3017A**	0.98	0.95	58PH*070–16
CNRV*3617A**	0.98	0.95	58PH*070–16
CSRH*3012A**	0.98	0.96	58PH*070–16
CSRH*3612A**	0.96	0.91	58PH*070–16
CAR**3621A**	0.97	0.92	58PH*090–16
CNRH*3017A**	0.97	0.94	58PH*090–16
CNRH*3617A**	0.97	0.94	58PH*090–16
CNRV*3621A**	0.97	0.94	58PH*090–16
CSRH*3012A**	0.97	0.94	58PH*090–16
CSRH*3612A**	0.96	0.90	58PH*090–16

See notes on pg. 49

HEAT PUMP HEATING PERFORMANCE CONTINUED

INDOOR AIR		OUTDOOR COIL ENTERING AIR TEMPERATURES °F (°C)																							
		–3 (–19.4)			7 (–13.9)			17 (–8.3)			27 (–2.8)			37 (2.8)			47 (8.3)			57 (13.9)			67 (19.4)		
EDB °F (°C)	CFM	Capacity MBtuh		Total Sys. KW†	Capacity MBtuh		Total Sys. KW†	Capacity MBtuh		Total Sys. KW†	Capacity MBtuh		Total Sys. KW†	Capacity MBtuh		Total Sys. KW†	Capacity MBtuh		Total Sys. KW†	Capacity MBtuh		Total Sys. KW†	Capacity MBtuh		Total Sys. KW†
		Total	Integ*		Total	Integ*		Total	Integ*		Total	Integ*		Total	Integ*		Total	Integ*		Total	Integ*		Total	Integ*	
25HBS331(A,G)30 Outdoor Section With FC4DN(F,B)030 Indoor Section																									
65 (18.3)	875	11.46	10.54	1.88	14.39	13.22	1.96	17.50	15.96	2.04	20.88	18.54	2.12	24.62	22.40	2.24	28.18	28.18	2.31	31.36	31.36	2.41	34.55	34.55	2.51
	1000	11.63	10.70	1.89	14.57	13.39	1.96	17.70	16.14	2.02	21.11	18.75	2.10	24.86	22.62	2.20	28.01	28.01	2.25	30.96	30.96	2.33	33.74	33.74	2.41
	1125	11.78	10.84	1.90	14.73	13.53	1.96	17.87	16.29	2.02	21.31	18.93	2.09	25.03	22.77	2.16	27.80	27.80	2.22	30.49	30.49	2.28	31.91	31.91	2.32
70 (21.1)	875	11.09	10.21	1.97	14.07	12.93	2.05	17.22	15.70	2.14	20.57	18.27	2.23	24.29	22.10	2.35	28.09	28.09	2.44	31.34	31.34	2.54	34.61	34.61	2.66
	1000	11.27	10.37	1.98	14.26	13.10	2.05	17.41	15.88	2.13	20.80	18.47	2.21	24.56	22.35	2.31	28.00	28.00	2.38	31.04	31.04	2.47	33.98	33.98	2.56
	1125	11.43	10.51	1.99	14.42	13.25	2.06	17.59	16.04	2.12	21.00	18.65	2.19	24.77	22.54	2.29	27.87	27.87	2.34	30.68	30.68	2.42	32.94	32.94	2.48
75 (23.9)	875	10.71	9.86	2.05	13.73	12.62	2.15	16.91	15.42	2.25	20.29	18.02	2.34	23.95	21.79	2.47	27.90	27.90	2.58	31.28	31.28	2.69	34.62	34.62	2.81
	1000	10.89	10.02	2.06	13.92	12.80	2.15	17.12	15.61	2.23	20.51	18.22	2.32	24.23	22.05	2.43	28.00	28.00	2.51	31.05	31.05	2.60	34.11	34.11	2.70
	1125	11.05	10.17	2.07	14.09	12.94	2.15	17.30	15.77	2.23	20.70	18.39	2.30	24.46	22.26	2.41	27.94	27.94	2.47	30.78	30.78	2.55	33.54	33.54	2.63

HEATING INDOOR MODEL	CAPACITY	POWER	FURNACE MODEL
*FC4DNF030	1.00	1.00	
FC4DN(F,B)036	0.98	1.00	
FK4DN(B,F)003	0.97	0.97	
FK4DN(B,F)005	0.84	0.88	
FK4DNF001	1.00	1.02	
FK4DNF002	1.00	0.98	
CAR**3014A**	0.99	1.01	58CV(A,X)070–12
CAR**3614A**	0.98	1.00	58CV(A,X)070–12
CNRH*3017A**	0.99	1.00	58CV(A,X)070–12
CNRH*3617A**	0.99	1.00	58CV(A,X)070–12
CSRH*3012A**	0.99	1.01	58CV(A,X)070–12
CSRH*3612A**	0.96	0.97	58CV(A,X)070–12
CAR**3017A**	0.99	1.00	58CV(A,X)090–16
CAR**3617A**	0.98	0.99	58CV(A,X)090–16
CNRH*3017A**	0.99	1.00	58CV(A,X)090–16
CNRH*3617A**	0.99	1.00	58CV(A,X)090–16
CNRV*3017A**	0.99	1.00	58CV(A,X)090–16
CNRV*3617A**	0.99	1.00	58CV(A,X)090–16
CSRH*3012A**	0.98	0.99	58CV(A,X)090–16
CSRH*3612A**	0.96	0.96	58CV(A,X)090–16
CAR**3621A**	0.98	0.98	58CV(A,X)110–20
CNRH*3017A**	0.99	1.00	58CV(A,X)110–20
CNRH*3617A**	0.99	1.00	58CV(A,X)110–20
CNRV*3621A**	0.99	0.99	58CV(A,X)110–20
CSRH*3012A**	0.98	0.99	58CV(A,X)110–20
CSRH*3612A**	0.96	0.95	58CV(A,X)110–20
CNRH*3017A**	0.99	0.99	58CV(A,X)135–22
CNRH*3617A**	0.99	0.99	58CV(A,X)135–22
CSRH*3012A**	0.98	0.99	58CV(A,X)135–22
CSRH*3612A**	0.96	0.95	58CV(A,X)135–22
CNRH*3017A**	0.98	0.98	58CV(A,X)155–22
CNRH*3617A**	0.98	0.98	58CV(A,X)155–22
CSRH*3012A**	0.98	0.99	58CV(A,X)155–22
CSRH*3612A**	0.96	0.95	58CV(A,X)155–22
CAR**3017A**	0.99	0.98	58MEB040–12
CAR**3617A**	0.97	0.96	58MEB040–12
CNRH*3017A**	0.99	0.98	58MEB040–12
CNRH*3617A**	0.99	0.98	58MEB040–12
CNRV*3017A**	0.99	0.98	58MEB040–12
CNRV*3617A**	0.99	0.98	58MEB040–12
CSRH*3012A**	0.98	0.98	58MEB040–12
CSRH*3612A**	0.96	0.94	58MEB040–12
CAR**3017A**	0.99	0.98	58MEB060–12
CAR**3617A**	0.97	0.96	58MEB060–12

HEATING INDOOR MODEL	CAPACITY	POWER	FURNACE MODEL
CNRH*3017A**	0.99	0.98	58MEB060–12
CNRH*3617A**	0.99	0.98	58MEB060–12
CNRV*3017A**	0.99	0.98	58MEB060–12
CNRV*3617A**	0.99	0.98	58MEB060–12
CSRH*3012A**	0.98	0.98	58MEB060–12
CSRH*3612A**	0.95	0.94	58MEB060–12
CAR**3017A**	0.99	0.98	58MEB080–12
CAR**3617A**	0.98	0.97	58MEB080–12
CNRH*3017A**	0.99	0.98	58MEB080–12
CNRH*3617A**	0.99	0.98	58MEB080–12
CNRV*3017A**	0.99	0.98	58MEB080–12
CNRV*3617A**	0.99	0.98	58MEB080–12
CSRH*3012A**	0.98	0.98	58MEB080–12
CSRH*3612A**	0.96	0.94	58MEB080–12
CAR**3017A**	0.99	0.98	58MEB080–16
CAR**3617A**	0.97	0.96	58MEB080–16
CNRH*3017A**	0.99	0.98	58MEB080–16
CNRH*3617A**	0.99	0.98	58MEB080–16
CNRV*3017A**	0.99	0.98	58MEB080–16
CNRV*3617A**	0.99	0.98	58MEB080–16
CSRH*3012A**	0.98	0.98	58MEB080–16
CSRH*3612A**	0.95	0.94	58MEB080–16
CNRH*3017A**	0.99	1.01	58MV(B,C)040–14
CNRH*3617A**	0.99	1.01	58MV(B,C)040–14
CSRH*3012A**	0.99	1.01	58MV(B,C)040–14
CSRH*3612A**	0.96	0.97	58MV(B,C)040–14
CAR**3017A**	0.99	1.00	58MV(B,C)060–14
CAR**3617A**	0.98	0.99	58MV(B,C)060–14
CNRH*3017A**	0.99	1.00	58MV(B,C)060–14
CNRH*3617A**	0.99	1.00	58MV(B,C)060–14
CNRV*3017A**	0.99	1.00	58MV(B,C)060–14
CNRV*3617A**	0.99	1.00	58MV(B,C)060–14
CSRH*3012A**	0.99	1.01	58MV(B,C)060–14
CSRH*3612A**	0.96	0.97	58MV(B,C)060–14
CAR**3621A**	0.98	0.99	58MV(B,C)080–14
CNRH*3017A**	0.99	1.00	58MV(B,C)080–14
CNRH*3617A**	0.99	1.00	58MV(B,C)080–14
CNRV*3621A**	0.99	1.00	58MV(B,C)080–14
CSRH*3012A**	0.99	1.01	58MV(B,C)080–14
CSRH*3612A**	0.96	0.97	58MV(B,C)080–14
CAR**3621A**	0.98	0.99	58MV(B,C)080–20
CNRH*3017A**	0.99	1.00	58MV(B,C)080–20
CNRH*3617A**	0.99	1.00	58MV(B,C)080–20
CNRV*3621A**	0.99	1.00	58MV(B,C)080–20

HEATING INDOOR MODEL	CAPACITY	POWER	FURNACE MODEL
CSRH*3012A**	0.98	1.00	58MV(B,C)080–20
CSRH*3612A**	0.96	0.97	58MV(B,C)080–20
CAR**3621A**	0.98	0.99	58MV(B,C)100–20
CNRH*3017A**	0.99	1.00	58MV(B,C)100–20
CNRH*3617A**	0.99	1.00	58MV(B,C)100–20
CNRV*3621A**	0.99	1.00	58MV(B,C)100–20
CSRH*3012A**	0.98	0.99	58MV(B,C)100–20
CSRH*3612A**	0.96	0.97	58MV(B,C)100–20
CNRH*3017A**	0.99	1.00	58MV(B,C)120–20
CNRH*3617A**	0.99	1.00	58MV(B,C)120–20
CSRH*3012A**	0.98	1.00	58MV(B,C)120–20
CSRH*3612A**	0.96	0.97	58MV(B,C)120–20
CAR**3017A**	0.99	1.01	58PH*070–16
CAR**3617A**	0.98	0.99	58PH*070–16
CSRH*3612A**	0.96	0.97	58PH*070–16
CAR**3621A**	0.97	0.97	58PH*090–16
CNRH*3017A**	0.99	0.99	58PH*090–16
CNRH*3617A**	0.99	0.99	58PH*090–16
CNRV*3621A**	0.99	0.99	58PH*090–16
CSRH*3612A**	0.96	0.95	58PH*090–16

See notes on pg. 49

HEAT PUMP HEATING PERFORMANCE CONTINUED

INDOOR AIR		OUTDOOR COIL ENTERING AIR TEMPERATURES °F (°C)																							
		–3 (–19.4)			7 (–13.9)			17 (–8.3)			27 (–2.8)			37 (2.8)			47 (8.3)			57 (13.9)			67 (19.4)		
EDB °F (°C)	CFM	Capacity MBtuh		Total Sys. KW†	Capacity MBtuh		Total Sys. KW†	Capacity MBtuh		Total Sys. KW†	Capacity MBtuh		Total Sys. KW†	Capacity MBtuh		Total Sys. KW†	Capacity MBtuh		Total Sys. KW†	Capacity MBtuh		Total Sys. KW†	Capacity MBtuh		Total Sys. KW†
		Total	Integ*		Total	Integ*		Total	Integ*		Total	Integ*		Total	Integ*		Total	Integ*		Total	Integ*		Total	Integ*	
25HBS336(A,G)30 Outdoor Section With FC4DN(F,B)036 Indoor Section																									
65 (18.3)	1050	15.24	14.02	2.26	18.79	17.27	2.36	22.78	20.77	2.48	27.24	24.19	2.64	31.58	28.74	2.77	34.86	34.86	2.90	37.45	37.45	3.00	37.82	37.82	3.00
	1200	15.43	14.19	2.27	19.01	17.47	2.36	23.03	21.00	2.47	27.54	24.46	2.63	31.12	28.32	2.72	34.10	34.10	2.83	34.64	34.64	2.84	34.66	34.66	2.84
	1350	15.58	14.34	2.28	19.20	17.65	2.37	23.25	21.20	2.48	27.70	24.61	2.61	30.73	27.97	2.70	32.56	32.56	2.76	32.53	32.53	2.75	32.30	32.30	2.74
70 (21.1)	1050	14.91	13.71	2.35	18.48	16.98	2.46	22.45	20.47	2.59	26.88	23.87	2.76	31.59	28.75	2.91	35.04	35.04	3.04	38.56	38.56	3.19	39.22	39.22	3.21
	1200	15.11	13.90	2.36	18.69	17.17	2.46	22.70	20.69	2.58	27.15	24.11	2.74	31.31	28.49	2.86	34.40	34.40	2.98	36.00	36.00	3.03	36.28	36.28	3.04
	1350	15.28	14.06	2.38	18.87	17.34	2.47	22.91	20.89	2.58	27.40	24.34	2.74	30.96	28.17	2.83	33.78	33.78	2.93	34.02	34.02	2.94	34.05	34.05	2.93
75 (23.9)	1050	14.56	13.39	2.45	18.17	16.70	2.57	22.10	20.15	2.70	26.51	23.54	2.88	31.35	28.53	3.06	35.12	35.12	3.20	38.80	38.80	3.36	40.54	40.54	3.43
	1200	14.76	13.58	2.46	18.37	16.88	2.57	22.34	20.37	2.69	26.79	23.79	2.86	31.40	28.57	3.00	34.62	34.62	3.13	37.29	37.29	3.24	37.68	37.68	3.24
	1350	14.94	13.74	2.48	18.56	17.06	2.58	22.57	20.57	2.69	27.02	23.99	2.85	31.15	28.35	2.97	34.11	34.11	3.08	35.29	35.29	3.13	35.52	35.52	3.13

HEATING INDOOR MODEL	CAPACITY	POWER	FURNACE MODEL
*FC4DN(F,B)036	1.00	1.00	
FC4DN(F,B)042	0.88	0.93	
FK4DN(B,F)003	1.01	0.99	
FK4DNF002	1.05	1.00	
CNRH*4221A**	1.00	0.98	58CV(A,X)070–12
CSRH*3612A**	0.98	0.97	58CV(A,X)070–12
CSRH*4212A**	0.94	0.94	58CV(A,X)070–12
CAR**3617A**	1.02	1.01	58CV(A,X)090–16
CNRH*3617A**	1.02	1.02	58CV(A,X)090–16
CNRH*4221A**	0.99	0.96	58CV(A,X)090–16
CNRV*3617A**	1.02	1.02	58CV(A,X)090–16
CSRH*3612A**	0.98	0.96	58CV(A,X)090–16
CSRH*4212A**	0.93	0.92	58CV(A,X)090–16
CAR**3621A**	1.01	1.00	58CV(A,X)110–20
CAR**4221A**	0.99	0.97	58CV(A,X)110–20
CNRH*3617A**	1.02	1.02	58CV(A,X)110–20
CNRH*4221A**	0.99	0.96	58CV(A,X)110–20
CNRV*3621A**	1.02	1.01	58CV(A,X)110–20
CNRV*4221A**	0.99	0.96	58CV(A,X)110–20
CSRH*3612A**	0.97	0.95	58CV(A,X)110–20
CSRH*4212A**	0.92	0.92	58CV(A,X)110–20
CAR**4224A**	0.99	0.97	58CV(A,X)135–22
CNRH*3617A**	1.02	1.01	58CV(A,X)135–22
CNRH*4221A**	0.99	0.96	58CV(A,X)135–22
CSRH*3612A**	0.97	0.95	58CV(A,X)135–22
CSRH*4212A**	0.93	0.92	58CV(A,X)135–22
CAR**4224A**	0.99	0.96	58CV(A,X)155–22
CNRH*3617A**	1.02	1.01	58CV(A,X)155–22
CNRH*4221A**	0.99	0.95	58CV(A,X)155–22
CSRH*3612A**	0.97	0.94	58CV(A,X)155–22
CSRH*4212A**	0.92	0.91	58CV(A,X)155–22
CAR**3617A**	1.01	1.00	58MEB040–12
CNRH*3617A**	1.02	1.01	58MEB040–12
CNRH*4221A**	0.99	0.97	58MEB040–12
CNRV*3617A**	1.02	1.01	58MEB040–12
CSRH*3612A**	0.94	0.93	58MEB040–12
CAR**3617A**	1.01	0.99	58MEB060–12
CNRH*3617A**	1.02	1.01	58MEB060–12
CNRH*4221A**	0.99	0.97	58MEB060–12
CNRV*3617A**	1.02	1.01	58MEB060–12
CSRH*3612A**	0.93	0.93	58MEB060–12
CSRH*4212A**	0.88	0.90	58MEB060–12
CAR**3617A**	1.01	1.00	58MEB080–12
CNRH*3617A**	1.02	1.01	58MEB080–12

HEATING INDOOR MODEL	CAPACITY	POWER	FURNACE MODEL
CNRH*4221A**	0.99	0.98	58MEB080–12
CNRV*3617A**	1.02	1.01	58MEB080–12
CSRH*3612A**	0.94	0.93	58MEB080–12
CSRH*4212A**	0.90	0.90	58MEB080–12
CAR**3617A**	1.01	0.99	58MEB080–16
CNRH*3617A**	1.02	1.02	58MEB080–16
CNRH*4221A**	0.99	0.98	58MEB080–16
CNRV*3617A**	1.02	1.02	58MEB080–16
CSRH*3612A**	0.94	0.93	58MEB080–16
CSRH*4212A**	0.89	0.90	58MEB080–16
CAR**3621A**	1.01	0.98	58MEB100–20
CNRH*3617A**	1.02	1.01	58MEB100–20
CNRH*4221A**	0.99	0.97	58MEB100–20
CNRV*3621A**	1.02	1.01	58MEB100–20
CNRV*4221A**	0.99	0.97	58MEB100–20
CSRH*3612A**	0.94	0.91	58MEB100–20
CSRH*4212A**	0.91	0.90	58MEB100–20
CAR**4224A**	1.01	1.00	58MV(B,C)040–14
CNRH*4221A**	1.00	0.98	58MV(B,C)040–14
CSRH*3612A**	0.98	0.98	58MV(B,C)040–14
CSRH*4212A**	0.94	0.95	58MV(B,C)040–14
CAR**3617A**	1.02	1.01	58MV(B,C)060–14
CNRH*3617A**	1.03	1.03	58MV(B,C)060–14
CNRH*4221A**	1.00	0.97	58MV(B,C)060–14
CNRV*3617A**	1.03	1.03	58MV(B,C)060–14
CSRH*3612A**	0.98	0.96	58MV(B,C)060–14
CSRH*4212A**	0.94	0.93	58MV(B,C)060–14
CAR**4221A**	1.01	1.00	58MV(B,C)080–14
CNRH*4221A**	1.00	0.98	58MV(B,C)080–14
CNRV*4221A**	1.00	0.98	58MV(B,C)080–14
CSRH*3612A**	0.98	0.98	58MV(B,C)080–14
CSRH*4212A**	0.94	0.95	58MV(B,C)080–14
CAR**4221A**	1.00	0.99	58MV(B,C)080–20
CNRH*4221A**	1.00	0.98	58MV(B,C)080–20
CNRV*3621A**	1.03	1.03	58MV(B,C)080–20
CNRV*4221A**	1.00	0.98	58MV(B,C)080–20
CSRH*3612A**	0.98	0.96	58MV(B,C)080–20
CSRH*4212A**	0.94	0.94	58MV(B,C)080–20
CAR**3621A**	1.02	1.01	58MV(B,C)100–20
CAR**4221A**	1.00	0.98	58MV(B,C)100–20
CNRH*3617A**	1.03	1.03	58MV(B,C)100–20
CNRH*4221A**	1.00	0.97	58MV(B,C)100–20
CNRV*3621A**	1.03	1.02	58MV(B,C)100–20
CNRV*4221A**	1.00	0.97	58MV(B,C)100–20

HEATING INDOOR MODEL	CAPACITY	POWER	FURNACE MODEL
CSRH*3612A**	0.98	0.96	58MV(B,C)100–20
CSRH*4212A**	0.93	0.93	58MV(B,C)100–20
CAR**4224A**	1.00	0.98	58MV(B,C)120–20
CNRH*3617A**	1.03	1.02	58MV(B,C)120–20
CNRH*4221A**	1.00	0.97	58MV(B,C)120–20
CSRH*3612A**	0.98	0.96	58MV(B,C)120–20
CSRH*4212A**	0.94	0.93	58MV(B,C)120–20
CSRH*3612A**	0.97	0.97	58PH*070–16
CAR**3621A**	1.01	0.99	58PH*090–16
CAR**4221A**	0.98	0.96	58PH*090–16
CNRH*3617A**	1.02	1.01	58PH*090–16
CNRH*4221A**	0.99	0.97	58PH*090–16
CNRV*3621A**	1.02	1.01	58PH*090–16
CNRV*4221A**	0.99	0.97	58PH*090–16
CAR**3621A**	1.00	0.98	58PH*110–20
CAR**4221A**	0.98	0.95	58PH*110–20
CNRH*3617A**	1.02	1.00	58PH*110–20
CNRH*4221A**	0.99	0.96	58PH*110–20
CNRV*3621A**	1.02	1.00	58PH*110–20
CNRV*4221A**	0.99	0.96	58PH*110–20

See notes on pg. 49

HEAT PUMP HEATING PERFORMANCE CONTINUED

INDOOR AIR		OUTDOOR COIL ENTERING AIR TEMPERATURES °F (°C)																							
		–3 (–19.4)			7 (–13.9)			17 (–8.3)			27 (–2.8)			37 (2.8)			47 (8.3)			57 (13.9)			67 (19.4)		
EDB °F (°C)	CFM	Capacity MBtuh		Total Sys. KW†	Capacity MBtuh		Total Sys. KW†	Capacity MBtuh		Total Sys. KW†	Capacity MBtuh		Total Sys. KW†	Capacity MBtuh		Total Sys. KW†	Capacity MBtuh		Total Sys. KW†	Capacity MBtuh		Total Sys. KW†	Capacity MBtuh		Total Sys. KW†
		Total	Integ*		Total	Integ*		Total	Integ*		Total	Integ*		Total	Integ*		Total	Integ*		Total	Integ*		Total	Integ*	
25HBS342(A,G)30 Outdoor Section With FC4DN(F,B)042 Indoor Section																									
65 (18.3)	1225	17.49	16.09	2.63	21.65	19.89	2.74	26.12	23.81	2.85	31.14	27.66	2.99	36.82	33.51	3.15	41.47	41.47	3.26	45.93	45.93	3.40	48.13	48.13	3.46
	1400	17.73	16.31	2.65	21.90	20.12	2.75	26.39	24.06	2.85	31.49	27.96	2.98	36.92	33.60	3.10	40.80	40.80	3.20	43.84	43.84	3.28	44.29	44.29	3.28
	1575	17.96	16.52	2.68	22.13	20.34	2.77	26.66	24.30	2.86	31.79	28.23	2.99	36.64	33.34	3.08	40.27	40.27	3.17	41.14	41.14	3.19	40.99	40.99	3.18
70 (21.1)	1225	17.09	15.72	2.73	21.32	19.59	2.86	25.80	23.52	2.98	30.74	27.30	3.13	36.38	33.10	3.31	41.50	41.50	3.42	46.00	46.00	3.57	49.37	49.37	3.68
	1400	17.34	15.95	2.76	21.57	19.82	2.87	26.07	23.77	2.98	31.08	27.60	3.11	36.78	33.47	3.26	41.00	41.00	3.36	45.15	45.15	3.48	45.89	45.89	3.49
	1575	17.56	16.16	2.78	21.80	20.04	2.89	26.32	24.00	2.99	31.37	27.86	3.11	36.83	33.51	3.23	40.45	40.45	3.32	42.73	42.73	3.38	43.06	43.06	3.38
75 (23.9)	1225	16.64	15.31	2.84	20.95	19.26	2.98	25.48	23.23	3.12	30.36	26.96	3.27	35.93	32.69	3.45	41.45	41.45	3.59	45.94	45.94	3.74	50.43	50.43	3.90
	1400	16.90	15.55	2.86	21.23	19.51	2.99	25.75	23.48	3.11	30.68	27.25	3.25	36.32	33.05	3.42	41.09	41.09	3.53	45.41	45.41	3.66	47.26	47.26	3.71
	1575	17.14	15.77	2.89	21.46	19.72	3.01	26.00	23.70	3.12	30.97	27.50	3.25	36.64	33.34	3.39	40.67	40.67	3.49	44.03	44.03	3.58	44.55	44.55	3.59

HEATING INDOOR MODEL	CAPACITY	POWER	FURNACE MODEL
*FC4DN(F,B)042	1.00	1.00	
FC4DN(F,B)048	0.94	0.94	
FK4DN(B,F)003	1.02	1.04	
FK4DN(B,F)005	0.91	0.93	
CNRH*4221A**	1.02	1.03	58CV(A,X)070–12
CNRH*4821A**	1.01	1.01	58CV(A,X)070–12
CSRH*4212A**	1.01	1.01	58CV(A,X)070–12
CSRH*4812A**	1.00	1.00	58CV(A,X)070–12
CAR**4817A**	0.95	0.95	58CV(A,X)090–16
CNRH*4221A**	1.01	1.01	58CV(A,X)090–16
CNRH*4821A**	1.00	0.98	58CV(A,X)090–16
CSRH*4212A**	1.00	0.98	58CV(A,X)090–16
CSRH*4812A**	1.00	0.98	58CV(A,X)090–16
CAR**4221A**	1.02	1.03	58CV(A,X)110–20
CAR**4821A**	0.98	0.97	58CV(A,X)110–20
CNRH*4221A**	1.01	1.00	58CV(A,X)110–20
CNRH*4821A**	1.00	0.98	58CV(A,X)110–20
CNRV*4221A**	1.01	1.00	58CV(A,X)110–20
CNRV*4821A**	1.00	0.98	58CV(A,X)110–20
CSRH*4212A**	1.00	0.98	58CV(A,X)110–20
CSRH*4812A**	0.99	0.97	58CV(A,X)110–20
CAR**4224A**	1.01	1.00	58CV(A,X)135–22
CAR**4824A**	0.98	0.96	58CV(A,X)135–22
CNRH*4221A**	1.01	0.99	58CV(A,X)135–22
CNRH*4821A**	1.00	0.97	58CV(A,X)135–22
CNRV*4824A**	1.00	0.97	58CV(A,X)135–22
CSRH*4212A**	1.00	0.97	58CV(A,X)135–22
CSRH*4812A**	0.99	0.96	58CV(A,X)135–22
CAR**4224A**	1.01	1.00	58CV(A,X)155–22
CAR**4824A**	0.98	0.96	58CV(A,X)155–22
CNRH*4221A**	1.01	0.99	58CV(A,X)155–22
CNRH*4821A**	1.00	0.97	58CV(A,X)155–22
CNRV*4824A**	1.00	0.97	58CV(A,X)155–22
CSRH*4212A**	1.00	0.97	58CV(A,X)155–22
CSRH*4812A**	0.99	0.96	58CV(A,X)155–22
CAR**4817A**	0.95	0.96	58MEB040–12
CNRH*4221A**	1.02	1.03	58MEB040–12
CNRH*4821A**	1.00	0.98	58MEB040–12
CSRH*4212A**	1.00	0.98	58MEB040–12
CSRH*4812A**	0.99	0.97	58MEB040–12
CAR**4817A**	0.95	0.96	58MEB060–12
CNRH*4221A**	1.02	1.03	58MEB060–12
CNRH*4821A**	1.00	0.99	58MEB060–12
CSRH*4212A**	1.00	0.99	58MEB060–12
CSRH*4812A**	0.99	0.97	58MEB060–12
CAR**4817A**	0.95	0.96	58MEB080–12

HEATING INDOOR MODEL	CAPACITY	POWER	FURNACE MODEL
CNRH*4221A**	1.02	1.03	58MEB080–12
CNRH*4821A**	1.00	0.98	58MEB080–12
CSRH*4212A**	1.00	0.98	58MEB080–12
CSRH*4812A**	0.99	0.97	58MEB080–12
CAR**4817A**	0.95	0.96	58MEB080–16
CNRH*4221A**	1.02	1.03	58MEB080–16
CNRH*4821A**	1.00	0.98	58MEB080–16
CSRH*4212A**	1.00	0.98	58MEB080–16
CSRH*4812A**	0.99	0.97	58MEB080–16
CAR**4221A**	1.01	1.00	58MEB100–20
CAR**4821A**	0.96	0.95	58MEB100–20
CNRH*4221A**	1.02	1.02	58MEB100–20
CNRH*4821A**	0.99	0.96	58MEB100–20
CNRV*4221A**	1.02	1.02	58MEB100–20
CNRV*4821A**	0.99	0.96	58MEB100–20
CSRH*4212A**	1.00	0.97	58MEB100–20
CSRH*4812A**	0.99	0.96	58MEB100–20
CAR**4224A**	1.01	0.99	58MEB120–20
CAR**4824A**	0.96	0.95	58MEB120–20
CNRH*4221A**	1.02	1.01	58MEB120–20
CNRH*4821A**	0.99	0.95	58MEB120–20
CNRV*4824A**	0.99	0.95	58MEB120–20
CSRH*4212A**	1.00	0.97	58MEB120–20
CSRH*4812A**	0.99	0.96	58MEB120–20
CAR**4224A**	1.02	1.04	58MV(B,C)040–14
CAR**4824A**	0.99	1.00	58MV(B,C)040–14
CNRH*4221A**	1.02	1.03	58MV(B,C)040–14
CNRH*4821A**	1.01	1.01	58MV(B,C)040–14
CNRV*4824A**	1.01	1.01	58MV(B,C)040–14
CSRH*4212A**	1.01	1.01	58MV(B,C)040–14
CSRH*4812A**	1.00	1.00	58MV(B,C)040–14
CAR**4817A**	0.96	0.97	58MV(B,C)060–14
CNRH*4221A**	1.02	1.02	58MV(B,C)060–14
CNRH*4821A**	1.00	0.99	58MV(B,C)060–14
CSRH*4212A**	1.00	0.99	58MV(B,C)060–14
CSRH*4812A**	1.00	0.99	58MV(B,C)060–14
CAR**4821A**	0.99	1.00	58MV(B,C)080–14
CNRH*4221A**	1.02	1.03	58MV(B,C)080–14
CNRH*4821A**	1.01	1.01	58MV(B,C)080–14
CNRV*4221A**	1.02	1.03	58MV(B,C)080–14
CNRV*4821A**	1.01	1.01	58MV(B,C)080–14
CSRH*4212A**	1.01	1.01	58MV(B,C)080–14
CSRH*4812A**	1.00	1.00	58MV(B,C)080–14
CAR**4221A**	1.02	1.04	58MV(B,C)080–20
CAR**4821A**	0.98	0.98	58MV(B,C)080–20
CNRH*4221A**	1.02	1.03	58MV(B,C)080–20

HEATING INDOOR MODEL	CAPACITY	POWER	FURNACE MODEL
CNRH*4821A**	1.00	0.99	58MV(B,C)080–20
CNRV*4221A**	1.02	1.03	58MV(B,C)080–20
CNRV*4821A**	1.00	0.99	58MV(B,C)080–20
CSRH*4212A**	1.00	0.99	58MV(B,C)080–20
CSRH*4812A**	1.00	0.99	58MV(B,C)080–20
CAR**4221A**	1.02	1.03	58MV(B,C)100–20
CAR**4821A**	0.98	0.98	58MV(B,C)100–20
CNRH*4221A**	1.02	1.02	58MV(B,C)100–20
CNRH*4821A**	1.00	0.98	58MV(B,C)100–20
CNRV*4221A**	1.02	1.02	58MV(B,C)100–20
CNRV*4821A**	1.00	0.99	58MV(B,C)100–20
CSRH*4212A**	1.00	0.99	58MV(B,C)100–20
CSRH*4812A**	1.00	0.99	58MV(B,C)100–20
CAR**4224A**	1.02	1.03	58MV(B,C)120–20
CAR**4824A**	0.98	0.98	58MV(B,C)120–20
CNRH*4221A**	1.01	1.01	58MV(B,C)120–20
CNRH*4821A**	1.00	0.98	58MV(B,C)120–20
CNRV*4824A**	1.00	0.98	58MV(B,C)120–20
CSRH*4212A**	1.00	0.99	58MV(B,C)120–20
CSRH*4812A**	1.00	0.99	58MV(B,C)120–20
CAR**4221A**	1.02	1.02	58PH*090–16
CAR**4821A**	0.98	0.97	58PH*090–16
CNRH*4221A**	1.02	1.02	58PH*090–16
CNRH*4821A**	0.99	0.96	58PH*090–16
CNRV*4221A**	1.02	1.02	58PH*090–16
CNRV*4821A**	1.00	0.98	58PH*090–16
CSRH*4212A**	1.00	0.98	58PH*090–16
CSRH*4812A**	0.99	0.97	58PH*090–16
CAR**4221A**	1.01	1.00	58PH*110–20
CAR**4821A**	0.96	0.95	58PH*110–20
CNRH*4221A**	1.02	1.02	58PH*110–20
CNRH*4821A**	0.99	0.96	58PH*110–20
CNRV*4221A**	1.02	1.02	58PH*110–20
CNRV*4821A**	0.99	0.96	58PH*110–20
CSRH*4212A**	1.00	0.97	58PH*110–20
CSRH*4812A**	0.99	0.96	58PH*110–20
CAR**4224A**	1.01	1.00	58PH*135–20
CAR**4824A**	0.98	0.97	58PH*135–20
CNRH*4221A**	1.02	1.03	58PH*135–20
CNRH*4821A**	0.99	0.96	58PH*135–20
CNRV*4824A**	0.99	0.96	58PH*135–20
CSRH*4212A**	1.00	0.98	58PH*135–20
CSRH*4812A**	0.99	0.97	58PH*135–20

See notes on pg. 49

HEAT PUMP HEATING PERFORMANCE CONTINUED

INDOOR AIR		OUTDOOR COIL ENTERING AIR TEMPERATURES °F (°C)																							
		–3 (–19.4)			7 (–13.9)			17 (–8.3)			27 (–2.8)			37 (2.8)			47 (8.3)			57 (13.9)			67 (19.4)		
EDB °F (°C)	CFM	Capacity MBtuh		Total Sys. KW†	Capacity MBtuh		Total Sys. KW†	Capacity MBtuh		Total Sys. KW†	Capacity MBtuh		Total Sys. KW†	Capacity MBtuh		Total Sys. KW†	Capacity MBtuh		Total Sys. KW†	Capacity MBtuh		Total Sys. KW†	Capacity MBtuh		Total Sys. KW†
		Total	Integ*		Total	Integ*		Total	Integ*		Total	Integ*		Total	Integ*		Total	Integ*		Total	Integ*		Total	Integ*	
25HBS348(A,G)30 Outdoor Section With FC4DN(F,B)048 Indoor Section																									
65 (18.3)	1400	19.48	17.92	2.97	24.07	22.12	3.10	29.00	26.45	3.24	34.52	30.66	3.39	40.69	37.02	3.57	47.39	47.39	3.73	53.45	53.45	3.92	56.78	56.78	4.02
	1600	19.77	18.19	2.99	24.37	22.39	3.11	29.34	26.75	3.23	34.93	31.02	3.37	41.16	37.46	3.53	46.98	46.98	3.65	51.54	51.54	3.78	51.49	51.49	3.76
	1800	20.03	18.42	3.02	24.63	22.63	3.13	29.63	27.02	3.24	35.25	31.31	3.37	41.43	37.70	3.49	46.41	46.41	3.61	47.80	47.80	3.63	46.57	46.57	3.59
70 (21.1)	1400	19.02	17.50	3.09	23.67	21.75	3.24	28.62	26.09	3.39	34.08	30.27	3.55	40.20	36.59	3.74	47.03	47.03	3.94	53.37	53.37	4.13	58.26	58.26	4.30
	1600	19.31	17.77	3.11	23.97	22.03	3.25	28.93	26.38	3.38	34.46	30.60	3.53	40.65	36.99	3.70	47.00	47.00	3.84	52.63	52.63	4.01	53.44	53.44	4.02
	1800	19.56	18.00	3.14	24.24	22.28	3.27	29.21	26.63	3.39	34.79	30.90	3.53	41.00	37.31	3.68	46.54	46.54	3.79	49.66	49.66	3.87	49.53	49.53	3.85
75 (23.9)	1400	18.48	17.00	3.21	23.22	21.34	3.38	28.22	25.73	3.55	33.63	29.87	3.72	39.72	36.14	3.92	46.45	46.45	4.16	53.18	53.18	4.34	59.10	59.10	4.56
	1600	18.78	17.28	3.23	23.53	21.63	3.39	28.55	26.03	3.54	34.01	30.21	3.70	40.15	36.54	3.88	46.87	46.87	4.04	52.65	52.65	4.22	55.06	55.06	4.29
	1800	19.05	17.53	3.26	23.81	21.88	3.41	28.84	26.30	3.55	34.34	30.50	3.69	40.53	36.88	3.86	46.61	46.61	3.99	51.01	51.01	4.12	51.38	51.38	4.11

HEATING INDOOR MODEL	CAPACITY	POWER	FURNACE MODEL
*FC4DN(F,B)048	1.00	1.00	
FC4DN(F,B)060	0.90	0.94	
FK4DN(B,F)005	0.98	0.99	
FK4DNB006	0.95	0.94	
CSRH*6012A**	0.95	1.00	
CAR**4817A**	1.00	1.04	58CV(A,X)090–16
CNRH*4821A**	0.99	1.04	58CV(A,X)090–16
CNRH*6024A**	0.98	1.01	58CV(A,X)090–16
CSRH*4812A**	0.99	1.04	58CV(A,X)090–16
CSRH*6012A**	0.98	1.00	58CV(A,X)090–16
CAR**4821A**	0.99	1.04	58CV(A,X)110–20
CAR**6021A**	0.95	0.99	58CV(A,X)110–20
CNRH*4821A**	0.99	1.04	58CV(A,X)110–20
CNRH*6024A**	0.98	1.01	58CV(A,X)110–20
CNRV*4821A**	0.99	1.04	58CV(A,X)110–20
CSRH*4812A**	0.99	1.03	58CV(A,X)110–20
CSRH*6012A**	0.98	1.00	58CV(A,X)110–20
CAR**4824A**	0.99	1.03	58CV(A,X)135–22
CAR**6024A**	0.95	0.99	58CV(A,X)135–22
CNRH*4821A**	0.99	1.03	58CV(A,X)135–22
CNRH*6024A**	0.98	1.00	58CV(A,X)135–22
CNRV*4824A**	0.99	1.03	58CV(A,X)135–22
CNRV*6024A**	0.98	1.00	58CV(A,X)135–22
CSRH*4812A**	0.99	1.02	58CV(A,X)135–22
CSRH*6012A**	0.98	0.99	58CV(A,X)135–22
CAR**4824A**	0.99	1.02	58CV(A,X)155–22
CAR**6024A**	0.94	0.97	58CV(A,X)155–22
CNRH*4821A**	0.99	1.02	58CV(A,X)155–22
CNRH*6024A**	0.98	0.99	58CV(A,X)155–22
CNRV*4824A**	0.99	1.02	58CV(A,X)155–22
CNRV*6024A**	0.98	0.99	58CV(A,X)155–22
CSRH*4812A**	0.99	1.02	58CV(A,X)155–22
CSRH*6012A**	0.97	0.97	58CV(A,X)155–22
CAR**4817A**	1.00	1.03	58MEB080–16
CNRH*4821A**	1.00	1.05	58MEB080–16
CNRH*6024A**	0.98	1.02	58MEB080–16
CSRH*4812A**	1.00	1.04	58MEB080–16
CSRH*6012A**	0.97	1.00	58MEB080–16
CAR**4821A**	0.99	1.03	58MEB100–20
CAR**6021A**	0.90	0.95	58MEB100–20
CNRH*4821A**	0.99	1.03	58MEB100–20
CNRH*6024A**	0.98	1.00	58MEB100–20
CNRV*4821A**	0.99	1.03	58MEB100–20
CSRH*4812A**	0.99	1.02	58MEB100–20

HEATING INDOOR MODEL	CAPACITY	POWER	FURNACE MODEL
CSRH*6012A**	0.97	0.98	58MEB100–20
CAR**4824A**	0.99	1.02	58MEB120–20
CAR**6024A**	0.90	0.95	58MEB120–20
CNRH*4821A**	0.99	1.02	58MEB120–20
CNRH*6024A**	0.97	0.99	58MEB120–20
CNRV*4824A**	0.99	1.02	58MEB120–20
CNRV*6024A**	0.97	0.99	58MEB120–20
CSRH*4812A**	0.99	1.01	58MEB120–20
CSRH*6012A**	0.97	0.97	58MEB120–20
CAR**6021A**	0.96	1.01	58MV(B,C)080–20
CNRH*6024A**	0.99	1.03	58MV(B,C)080–20
CSRH*4812A**	1.00	1.05	58MV(B,C)080–20
CSRH*6012A**	0.98	1.01	58MV(B,C)080–20
CAR**4821A**	0.99	1.05	58MV(B,C)100–20
CAR**6021A**	0.95	1.00	58MV(B,C)100–20
CNRH*4821A**	0.99	1.05	58MV(B,C)100–20
CNRH*6024A**	0.98	1.02	58MV(B,C)100–20
CNRV*4821A**	0.99	1.05	58MV(B,C)100–20
CSRH*4812A**	1.00	1.05	58MV(B,C)100–20
CSRH*6012A**	0.98	1.00	58MV(B,C)100–20
CAR**4824A**	0.99	1.05	58MV(B,C)120–20
CAR**6024A**	0.96	1.01	58MV(B,C)120–20
CNRH*4821A**	0.99	1.05	58MV(B,C)120–20
CNRH*6024A**	0.98	1.02	58MV(B,C)120–20
CNRV*4824A**	0.99	1.05	58MV(B,C)120–20
CNRV*6024A**	0.98	1.02	58MV(B,C)120–20
CSRH*4812A**	0.99	1.04	58MV(B,C)120–20
CSRH*6012A**	0.98	1.00	58MV(B,C)120–20
CAR**4821A**	0.99	1.03	58PH*090–16
CNRH*4821A**	0.99	1.03	58PH*090–16
CNRH*6024A**	0.98	1.01	58PH*090–16
CNRV*4821A**	0.99	1.03	58PH*090–16
CSRH*4812A**	1.00	1.04	58PH*090–16
CSRH*6012A**	0.97	0.99	58PH*090–16
CAR**4821A**	0.99	1.03	58PH*110–20
CNRH*4821A**	0.99	1.03	58PH*110–20
CNRH*6024A**	0.98	1.00	58PH*110–20
CNRV*4821A**	0.99	1.03	58PH*110–20
CSRH*4812A**	0.99	1.02	58PH*110–20
CSRH*6012A**	0.97	0.98	58PH*110–20
CAR**4824A**	0.99	1.03	58PH*135–20
CAR**4824A**	0.99	1.03	58PH*135–20
CNRH*4821A**	0.99	1.03	58PH*135–20
CNRH*6024A**	0.98	1.00	58PH*135–20

HEATING INDOOR MODEL	CAPACITY	POWER	FURNACE MODEL
CNRV*4824A**	0.99	1.03	58PH*135–20
CNRV*6024A**	0.98	1.00	58PH*135–20
CSRH*4812A**	0.99	1.03	58PH*135–20
CSRH*6012A**	0.97	0.98	58PH*135–20

See notes on pg. 49

HEAT PUMP HEATING PERFORMANCE CONTINUED

INDOOR AIR		OUTDOOR COIL ENTERING AIR TEMPERATURES ° F (° C)																							
		−3 (−19.4)			7 (−13.9)			17 (−8.3)			27 (−2.8)			37 (2.8)			47 (8.3)			57 (13.9)			67 (19.4)		
EDB	CFM	Capacity MBtuh		Total Sys. KW†	Capacity MBtuh		Total Sys. KW†	Capacity MBtuh		Total Sys. KW†	Capacity MBtuh		Total Sys. KW†	Capacity MBtuh		Total Sys. KW†	Capacity MBtuh		Total Sys. KW†	Capacity MBtuh		Total Sys. KW†	Capacity MBtuh		Total Sys. KW†
		Total	Integ*		Total	Integ*		Total	Integ*		Total	Integ*		Total	Integ*		Total	Integ*		Total	Integ*		Total	Integ*	
25HBS360(A,G)31 Outdoor Section With FC4DNF060 Indoor Section																									
65	1750	24.66	22.68	3.63	30.17	27.72	3.78	36.04	32.86	3.92	42.52	37.77	4.08	49.83	45.35	4.24	56.51	56.51	4.40	60.94	60.94	4.51	63.20	63.20	4.55
	2000	25.02	23.02	3.67	30.54	28.07	3.80	36.43	33.21	3.93	42.98	38.17	4.08	49.93	45.44	4.20	55.03	55.03	4.31	57.02	57.02	4.35	55.19	55.19	4.29
	2250	25.36	23.33	3.72	30.89	28.38	3.84	36.78	33.54	3.96	43.38	38.53	4.09	49.73	45.25	4.19	52.46	52.46	4.24	53.42	53.42	4.25	52.75	52.75	4.23
70	1750	24.15	22.21	3.79	29.72	27.31	3.95	35.68	32.53	4.11	42.06	37.36	4.28	49.31	44.88	4.48	56.38	56.38	4.62	62.39	62.39	4.79	63.38	63.38	4.80
	2000	24.52	22.56	3.83	30.11	27.67	3.98	36.07	32.89	4.12	42.52	37.76	4.27	49.75	45.27	4.41	56.00	56.00	4.56	58.89	58.89	4.62	58.80	58.80	4.60
	2250	24.86	22.87	3.88	30.47	28.00	4.01	36.43	33.21	4.14	42.92	38.12	4.28	49.76	45.29	4.40	54.49	54.49	4.50	55.46	55.46	4.51	55.11	55.11	4.49
75	1750	23.58	21.69	3.94	29.23	26.86	4.12	35.26	32.15	4.30	41.64	36.99	4.49	48.74	44.35	4.70	56.18	56.18	4.86	63.11	63.11	5.07	64.88	64.88	5.10
	2000	23.97	22.05	3.99	29.63	27.23	4.15	35.67	32.52	4.31	42.06	37.36	4.47	49.28	44.85	4.65	55.95	55.95	4.79	60.42	60.42	4.90	60.69	60.69	4.89
	2250	24.32	22.37	4.04	29.99	27.56	4.19	36.04	32.86	4.34	42.46	37.71	4.48	49.67	45.20	4.62	55.56	55.56	4.76	57.22	57.22	4.78	57.27	57.27	4.77

HEATING INDOOR MODEL	CAPACITY	POWER	FURNACE MODEL
*FC4DN(F,B)060	1.00	1.00	
FK4DNB006	1.00	1.00	
CNRH*6024A**	1.02	1.05	58CV(A,X)135 – 22
CNRV*6024A**	1.02	1.05	58CV(A,X)135 – 22
CSRH*6012A**	1.02	1.03	58CV(A,X)135 – 22
CAR**6024A**	0.99	1.02	58CV(A,X)155 – 22
CNRH*6024A**	1.01	1.03	58CV(A,X)155 – 22

HEATING INDOOR MODEL	CAPACITY	POWER	FURNACE MODEL
CNRV*6024A**	1.01	1.03	58CV(A,X)155 – 22
CSRH*6012A**	1.01	1.01	58CV(A,X)155 – 22
CAR**6021A**	0.97	1.02	58MEB100 – 20
CNRH*6024A**	1.02	1.06	58MEB100 – 20
CSRH*6012A**	1.02	1.04	58MEB100 – 20
CAR**6024A**	0.99	1.03	58MEB120 – 20
CNRH*6024A**	1.01	1.04	58MEB120 – 20

HEATING INDOOR MODEL	CAPACITY	POWER	FURNACE MODEL
CNRV*6024A**	1.01	1.04	58MEB120 – 20
CSRH*6012A**	1.01	1.02	58MEB120 – 20
CAR**6021A**	0.98	1.02	58PH*110 – 20
CNRH*6024A**	1.02	1.05	58PH*110 – 20
CSRH*6012A**	1.02	1.03	58PH*110 – 20
CSRH*6012A**	1.02	1.04	58PH*135 – 20

NOTE: When the required data falls between the published data, interpolation may be performed. Extrapolation is not an acceptable practice.

* The Btuh heating capacity values shown are net integrated values from which the defrost effect has been subtracted. The Btuh heating from supplement heaters should be added to those values to obtain total system capacity.

† The kW values include the compressor, outdoor fan motor, and indoor blower motor. The kW from supplement heaters should be added to these values to obtain total system kilowatts.

EDB — Entering Dry Bulb

GUIDE SPECIFICATIONS
GENERAL

System Description

Outdoor-mounted, air-cooled, split-system heat pump unit suitable for ground or rooftop installation. Unit consists of a hermetic compressor, an air-cooled coil, propeller-type condenser fan, and a control box. Unit will discharge supply air upward as shown on contract drawings. Unit will be used in a refrigeration circuit to match up to a packaged fan coil or coil unit.

Quality Assurance

— Unit will be rated in accordance with the latest edition of ARI Standard 240.

— Unit will be certified for capacity and efficiency, and listed in the latest ARI directory.

— Unit construction will comply with latest edition of ANSI/ ASHRAE and with NEC.

— Unit will be constructed in accordance with UL standards and will carry the UL label of approval. Unit will have C-UL approval.

— Unit cabinet will be capable of withstanding Federal Test Method Standard No. 141 (Method 6061) 500-hr salt spray test.

— Air-cooled condenser coils will be leak tested and pressure tested.

— Unit constructed in ISO9001 approved facility.

Delivery, Storage, and Handling

— Unit will be shipped as single package only and is stored and handled per unit manufacturer's recommendations.

Warranty (for inclusion by specifying engineer)

— U.S. and Canada only.

PRODUCTS

Equipment

— Factory assembled, single piece, air-cooled heat pump unit. Contained within the unit enclosure is all factory wiring, piping, controls, compressor, refrigerant charge (R-22), and special features required prior to field start-up.

Unit Cabinet

— Unit cabinet will be constructed of galvanized steel, bonderized, and coated with a powder coat paint.

Fans

— Condenser fan will be direct-drive propeller type, discharging air upward.

— Condenser fan motors will be totally enclosed, 1-phase type with class B insulation and permanently lubricated bearings.

— Shafts will be corrosion resistant.

— Fan blades will be statically and dynamically balanced.

— Condenser fan openings will be equipped with steel wire safety guards.

Compressor

— Compressor will be hermetically sealed.

— Compressor will be mounted on rubber vibration isolators.

Condenser Coil

— Condenser coil will be air cooled.

— Coil will be constructed of aluminum fins mechanically bonded to copper tubes which are then cleaned, dehydrated, and sealed.

Refrigeration Components

— Refrigeration circuit components will include liquid-line shutoff valve with sweat connections, vapor-line shutoff valve with sweat connections, system charge of refrigerant, compressor oil, accumulator, loss of charge switch, and reversing valve.

Operating Characteristics

— The capacity of the unit will meet or exceed _____ Btuh at a suction temperature of _____ °F/°C. The power consumption at full load will not exceed _____ kW.

— Combination of the unit and the evaporator or fan coil unit will have a total net cooling capacity of _____ Btuh or greater at conditions of _____ CFM entering air temperature at the evaporator at _____ °F/°C wet bulb and _____ °F/°C dry bulb, and air entering the unit at _____ °F/°C.

— The system will have a SEER of _____ Btuh/watt or greater at DOE conditions.

Electrical Requirements

— Nominal unit electrical characteristics will be _____ v, single phase, 60 hz. The unit will be capable of satisfactory operation within voltage limits of _____ v to _____ v.

— Nominal unit electrical characteristics will be _____ v, three phase, 60 hz. The unit will be capable of satisfactory operation within voltage limits of _____ v to _____ v.

— Unit electrical power will be single point connection.

— Control circuit will be 24v.

Special Features

— Refer to section of this literature identifying accessories and descriptions for specific features and available enhancements.

Copyright 2009 Carrier Corp. • 7310 W. Morris St. • Indianapolis, IN 46231 Printed in U.S.A. Edition Date: 02/09

Manufacturer reserves the right to change, at any time, specifications and designs without notice and without obligations.

Replaces: 25HBS3–2PD